(12) INTERNATIONAL APPLICATION PUBLISHED UNDER THE PATENT COOPERATION TREATY (PCT)

(19) World Intellectual Property Organization
International Bureau

(43) International Publication Date
03 November 2022 (03.11.2022)

WIPO | PCT

(10) International Publication Number
WO 2022/229609 A1

(51) International Patent Classification:
B25J 9/10 (2006.01) *B25J 19/00* (2006.01)

(21) International Application Number:
PCT/GB2022/051025

(22) International Filing Date:
22 April 2022 (22.04.2022)

(25) Filing Language: English

(26) Publication Language: English

(30) Priority Data:

2106266.6	30 April 2021 (30.04.2021)	GB
2107636.9	28 May 2021 (28.05.2021)	GB
2114996.8	20 October 2021 (20.10.2021)	GB

(71) Applicant: **ENGINEERED ARTS LTD** [GB/GB]; E1-E3 Church View Business Park, Falmouth Cornwall TR11 4FZ (GB).

(72) Inventors: **JACKSON, Will**; c/o Engineered Arts Ltd, E1-E3 Church View Business Park, Falmouth Cornwall TR11 4FZ (GB). **MALETZ, Patrick**; c/o Engineered Arts Ltd, E1-E3 Church View Business Park, Falmouth Cornwall TR11 4FZ (GB). **LUSTY, Chris**; c/o Engineered Arts Ltd, E1-E3 Church View Business Park, Falmouth Cornwall TR11 4FZ (GB).

(74) Agent: **FORRESTERS IP LLP**; Port of Liverpool Building, Pier Head, Liverpool Merseyside L3 1AF (GB).

(81) Designated States *(unless otherwise indicated, for every kind of national protection available)*: AE, AG, AL, AM, AO, AT, AU, AZ, BA, BB, BG, BH, BN, BR, BW, BY, BZ, CA, CH, CL, CN, CO, CR, CU, CZ, DE, DJ, DK, DM, DO,

(54) Title: LOAD COMPENSATED MECHANICAL ARM WITH CARTESIAN MOTION

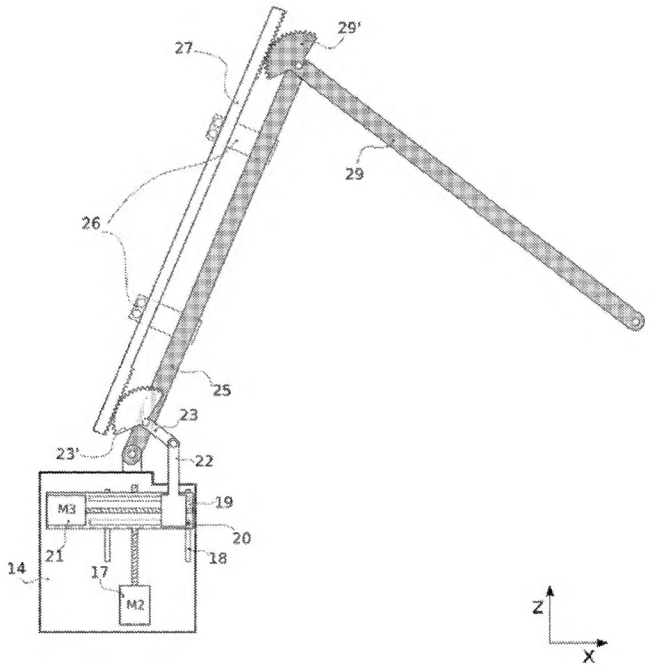

Figure 4a

(57) Abstract: A robotic manipulator arm system, comprising a mechanical arm that forms a pantograph mechanism. The arm comprises a first primary member (25) pivotally mounted to a fixed point or a base (14); a second primary member (29) pivotally connected to the first primary member (25), a drive member (23) connected to the first primary member (25); and a motion coupling mechanism comprising a motion coupling member (27) that couples the drive member (23) to the second primary member (29); and an actuation mechanism configured to drive the drive member (23) in at least two axes. The motion coupling mechanism links input motion applied to the drive member (23) to output motion at a distal end of the second primary member (29). The arm is configured to receive driving input motion from the actuation mechanism at the drive member (23) and produce geometrically similar, scaled output motion at the distal end of the second primary member (29).

WO 2022/229609 A1

[Continued on next page]

DZ, EC, EE, EG, ES, FI, GB, GD, GE, GH, GM, GT, HN, HR, HU, ID, IL, IN, IR, IS, IT, JM, JO, JP, KE, KG, KH, KN, KP, KR, KW, KZ, LA, LC, LK, LR, LS, LU, LY, MA, MD, ME, MG, MK, MN, MW, MX, MY, MZ, NA, NG, NI, NO, NZ, OM, PA, PE, PG, PH, PL, PT, QA, RO, RS, RU, RW, SA, SC, SD, SE, SG, SK, SL, ST, SV, SY, TH, TJ, TM, TN, TR, TT, TZ, UA, UG, US, UZ, VC, VN, WS, ZA, ZM, ZW.

(84) **Designated States** *(unless otherwise indicated, for every kind of regional protection available)*: ARIPO (BW, GH, GM, KE, LR, LS, MW, MZ, NA, RW, SD, SL, ST, SZ, TZ, UG, ZM, ZW), Eurasian (AM, AZ, BY, KG, KZ, RU, TJ, TM), European (AL, AT, BE, BG, CH, CY, CZ, DE, DK, EE, ES, FI, FR, GB, GR, HR, HU, IE, IS, IT, LT, LU, LV, MC, MK, MT, NL, NO, PL, PT, RO, RS, SE, SI, SK, SM, TR), OAPI (BF, BJ, CF, CG, CI, CM, GA, GN, GQ, GW, KM, ML, MR, NE, SN, TD, TG).

Published:

— *with international search report (Art. 21(3))*

— *before the expiration of the time limit for amending the claims and to be republished in the event of receipt of amendments (Rule 48.2(h))*

LOAD COMPENSATED MECHANICAL ARM WITH CARTESIAN MOTION

FIELD

This invention is in the field of mechanical manipulator arms, particularly but not exclusively for robotic devices for applications such as material handling and pick-and-place operations.

BACKGROUND

A common task in typical pick-and-place or material handling applications is to lift an item vertically up from a first surface or container and place the item vertically down to a second surface or container. It is generally advantageous to perform such operations at high speed, while providing compliant handling capability so as to avoid damaging the articles being manipulated.

A range of mechanical arm configurations are known and industrially employed in robots for operations such as material handling and pick-and-place operations.

One of the most commonly employed solutions is a six-axis arm with series joints arranged from a fixed base to the end effector location. Such devices are typically designed as general purpose machines without a specific application in mind, but with the flexibility to be adapted by the end user to a large number of tasks. This results in robots that are not optimised for a particular task.

In the case of pick-and-place operations, such six-axis arms offer more degrees of freedom than are often required. This means the robots have greater complexity and greater cost than is needed for the application. These robots are also typically built very heavily, in order to keep high stiffness and positional accuracy at the end of a 6-axis serial motion chain, while dealing with large loads and forces. This makes them physically heavy, requiring large motors and supporting structures, as well as limiting acceleration due to large inertia. This stiff build structure and high reduction transmission also precludes such arms from offering high mechanical compliance. To get around this, existing solutions based on six-axis arms have to use active compliance based on force sensing techniques with fast active feedback loops. This adds significant cost and complexity, and even the current state of the art in such techniques struggles to provide the compliance characteristics required in various applications.

Other mechanisms are known though which manipulator arms are realised with fewer degrees of freedom and more tailored characteristics to handling / sorting / pick-and-place operations. One of the most commonly used is the SCARA type robot. These typically work within a cylindrical working envelope, composed from a central rotational axis, a lateral reach axis in the plane perpendicular to the central rotation axis, and lift axis parallel (sometimes coincident) with the central rotation axis.

In the most common SCARA implementation, the reach is achieved by means of a hinged arm (hinges parallel to the central rotation axis). The hinges are motorised to extend and retract the arm.

Such robots are extremely well suited to certain pick-and-place type applications, for instance moving parts around on flat surfaces, on and off conveyor lines, or into and out of containers of limited depth. A limitation with these robots is generally the reach of the vertical axis – the largest commercially available models tend to offer no more than 4-500 mm vertical lift. This is a limitation for moving objects into and out of taller containers. They are also typically heavily constructed to allow sufficient stiffness for high positional accuracy at the end effector, similar to the six-axis serial robot arms. While this is useful for applications where the machines may perform precise insertion / assembly tasks, it is excessive for general purpose pick and place applications, once more leading to a heavier, bulkier and more expensive machine than may otherwise be achieved.

A further well known mechanism for manipulator arms is the (typically) four-axis coupled-parallelogram arm, most often employed for palletiser type robots. Such arms are lighter and simpler than six axis arms, at the sacrifice of the achievable range of motion. However for certain applications, the range of motion offered is very well suited to the task. Advantages of this mechanism include its comparative simplicity, and the ability to locate actuators (e.g. motors) for three axes of motion all at the base of the arm, reducing moving mass.

Existing arms of this type are not designed with high compliance, typically using powerful motors with high gearing to achieve good position control under heaving loading.

The present invention aims to provide a mechanical arm specifically designed to meet the needs of general purpose picking applications with a lightweight, high speed, low cost, highly compliant and low complexity device. Embodiments of the present invention are less expensive to manufacture and operate, reducing costs.

The present invention shares a similar work envelope to both SCARA and palletiser type arms, i.e. a cylindrical working volume inherently suited to vertical picking and placing of items from one surface or container to another. The device modifies the well-known coupled-parallelogram linkage of industrial palletiser robots to become a type of geared pantograph mechanism. This is done in such a way as to allow convenient de-coupled driving of the arm motion by a pair of linear actuators (for example ball-screw actuators), while at the same time providing facility for adjustable load compensation of workpieces attached to the arm. This load compensation opens the path to

using very low actuation forces, and thus inherent passive compliance within the arm. This combination of qualities is well suited to picking workpieces out of and into relatively deep containers (e.g. storage totes).

A manipulator arm employing a pin-jointed parallelogram type mechanism is disclosed in JP22212183A. The arm is driven by a pair of ball-screw actuators and employs static masses to balance the combined mass of the robot's own arm segments and its payload. This mechanism is not adaptable in terms of dynamically adjusting to counterbalance a varying payload, which places higher demands on the actuator forces than would otherwise be possible, and limiting the possibility of achieving passive compliance of the manipulator. Further, the actuators in this device drive the mechanism at two separate 1 degree of freedom input points. This leads to a design without a central pivot point, where one of the primary members attached to the base undergoes a horizontal displacement as part of the actuation mechanism. This in turn makes the device difficult and inconvenient to fully enclose, which limits its use possibilities in either human-collaborative or hygienic environments. The design is based on a typical pin-jointed mechanism structure, and the kinematics are not well suited to variation to alternative mechanism designs (no such alternatives are disclosed).

The present disclosure addresses each of these issues, offering dedicated, dynamically variable payload balancing, an improved kinematic chain employing a single 2 degree of freedom input point with a fixed central pivot, consequent ease of full enclosure of all mechanics, and options (with distinct functional advantages) for various construction methods (pinned links, belt driven, linear geared etc.) without any change to the fundamental kinematic structure.

FR3021574B1 discloses a manipulator arm which includes means for adjustably balancing a changeable load at the manipulator working end. The manipulator is of the well-known pin-jointed parallelogram type. The actuation is provided by means of ball-screw-driven pulley systems, which drive the arm via rotary actuation at two separate 1 degree of freedom input points. This results in a lack of direct uncoupled Cartesian motion drive – i.e. each actuator will move the robot end effector through a curvilinear path, and achieving straight line Cartesian motion (e.g. pure horizontal or vertical) requires interpolation of both actuators. This contrasts the current disclosure, which offers completely decoupled planar driving capability. The drive mechanism used in FR3021574B1 (screw-driven pulleys) also entails additional complexity and cost when compared to the solution provided by the present disclosure.

A manipulator arm is disclosed by DE10348724A1. This arm is proposed as a device for assisting manual handling (i.e. supporting a load to allow easy manual manipulation), and as such provides no means for driven control of the arm position and cannot function as a robot or other powered machine. The arm disclosed uses a pin-jointed parallelogram mechanism and achieves balancing

through the use of a cylinder acting through two sets of linear slides, arranged in series (a set of grounded vertical slides, on which is mounted a set of horizontal slides). The balancing force from the cylinder is transmitted through theses slides to balance loads supported at the end of the arm.

In contrast, the present disclosure discusses a complete, powered robotic arm, with multiple construction options (belts, linear gearing etc.) that provide for a reduced or zero backlash structure with an expanded working envelope (compared to the limits imposed by pin-jointed parallelograms).

Each of the prior art documents noted above use a traditional pin-jointed parallelogram structure as part of its core kinematic structure. While our design may be used with such a construction (Figure 1), the parallelogram functionality is preferably realised by means of a non-collapsible / constant offset parallelogram structure, e.g. using a rack and pinion, belt drive, chain drive or similar method. This entirely avoids the limitations of pin jointed parallelograms, particularly the high internal forces and reduced mechanical stiffness associated with parallelogram collapse, and the consequent limitations imposed on working range of motion.

BRIEF DESCRIPTION OF THE INVENTION

The present invention provides a system as claimed in claim 1 and a method as claimed in claim 23. The present invention also provides preferred embodiments as claimed in the dependent claims and discussed further below.

In its simplest form, the present invention provides a robotic manipulator arm comprising a kinematic chain that forms a pantograph mechanism.

In a first aspect, the present disclosure provides a robotic manipulator arm system, comprising a mechanical arm that forms a pantograph mechanism, the arm comprising:

a first primary member (25) pivotally mounted to a fixed point or a base (14);

a second primary member (29) pivotally connected to the first primary member (25);

a drive member (23) connected to the first primary member (25); and

a motion coupling mechanism comprising a motion coupling member (27) that couples the drive member (23) to the second primary member (29); and

an actuation mechanism configured to drive the drive member (23) in at least two axes, wherein:

the motion coupling mechanism links input motion applied to the drive member (23) to output motion at a distal end of the second primary member (29); and

the arm is configured to receive driving input motion from the actuation mechanism at the drive member (23) and produce geometrically similar, scaled output motion at the distal end of the second primary member (29).

These core features are best illustrated in figures 2 and 4a (discussed further below) and are sufficient to perform the core operation of the robot arm. Additional preferred embodiments are shown in Figures 4b, 4c and 5-9.

In a particular embodiment illustrated in Figure 4b, the present invention provides a mechanical manipulation device for robotic pick-and-place type operations comprising: a fixed base part, on which is mounted: a rotatable base part (typically rotating about a vertical axis), on which is mounted: a geared pantograph type mechanism designed to achieve planar motion, at the distal end of which is mounted: an end working platform.

The working platform is caused to remain at a constant orientation relative to the ground as the arm articulates to any position (typically held flat with respect to gravity) by means of a belt-and-pulley or equivalent sprocket-and-chain constraining system (Figure 4b), or a (pin-jointed) coupled-parallelogram linkage (Figure 4c) acting between the rotating base part and the working platform. The working platform carries a second rotation axis, typically parallel to the first rotation axis at the base, on which is mounted an end-effector device.

The pantograph-type mechanism making up the main links of the arm in this particular embodiment is driven by two linear actuator devices located at the base of the arm, which act in series with each other, preferably by means of a pair of perpendicular linear slide mechanisms.

Adjustable load balancing may be provided by means of an adjustable force actuator (e.g. a cylinder) which also acts by way of the pair of perpendicular linear slide mechanisms, as detailed herein. Such a feature allows the use of low power actuation components with minimal gearing to drive the machine, which allows realisation of a high passive mechanical compliance, with many attendant functional advantages.

The present disclosure also encompasses other embodiments as is apparent from the detailed description.

BRIEF DESCRIPTION OF THE FIGURES

In order that the present disclosure may be more readily understood, preferable embodiments thereof will now be described, by way of example only, with reference to the accompanying drawings, in which:

FIGURE 1 is a schematic view of key geometry of a first system embodying the present disclosure;
FIGURE 2 is a schematic view of key geometry for a preferred system embodying the present disclosure;
FIGURE 3 is a flow chart comparing prior designs with the present disclosure;
FIGURES 4a-4c are schematic views of first, second and third preferred systems embodying the present disclosure;
FIGURE 5 is a schematic view of a fourth preferred system embodying the present disclosure;
FIGURE 6 is a schematic view of a fifth preferred system embodying the present disclosure;
FIGURE 7 is a schematic view of a sixth preferred system embodying the present disclosure;
FIGURE 8 is a schematic view of the system of Figure 4b in another plane, embodying the present disclosure; and
FIGURE 9 is a schematic view of a seventh preferred system embodying the present disclosure.

DETAILED DESCRIPTION OF THE DISCLOSURE

Figures 1 and 2 illustrate a robotic manipulator arm that forms a pantograph mechanism, which is a mechanical linkage based on parallelograms. The arm comprises a first primary member 25 pivotally mounted to a fixed point P1, a second primary member 29 pivotally connected to the first primary member 25 at P3, a drive member 23 connected to the first primary member 25 at P2 and a motion coupling mechanism comprising a motion coupling member 27 that couples the drive member 23 to the second primary member 29.

In Figure 1, the motion coupling mechanism comprises a pin-jointed member 27. In Figure 2, the motion coupling mechanism comprises a gear train mechanism in the form of a rack-and-pinion. Here, the motion coupling member 27 comprises a rack which engages with a first pinion 23' on the drive member 23 and with a second pinion 29' forming part of the second primary member 29.

In Figures 1 and 2:

P1 is the fixed pivot point at the proximal end of the first primary member 25
D1 is the drive input point at the proximal end of the drive member 23
R1 is the output point at the distal end of the second primary member 29
P2 and P3 are internal pin joints

The points [P1 P2 D1] and [P1 P3 R1] form similar triangles.

The lengths (distance) between the points [P1 P3] / [P1 P2] = [R1 P3] / [D1 P2] = [P1 R1] / [P1 D1] = k, where k is the scaling factor for the mechanism, such that rx = k*dx and rz = k*dz.

In use, an actuation mechanism is configured to drive the drive member 23 in at least two axes at D1 and the motion coupling mechanism links input motion applied to the drive member 23 at D1, to output motion at a distal end of the second primary member 29. The arm is configured to receive driving input motion from the actuation mechanism at the drive member 23 and produce geometrically similar, scaled output motion at the distal end R1 of the second primary member 29.

Due to the nature of the pantograph, planar (x,z) driving motion applied to the input point D1 is translated to a geometrically similar motion (multiplied by a constant scaling factor) at R1. We take advantage of this characteristic by implementing an (x,z) driving unit at D1, preferably by utilising two linear actuators and a pair of stacked sliders as shown in Figures 4a - 9, which yields a robot arm with the general form factor of an articulated arm (compact, good working envelope to size ratio), with the advantage of decoupled Cartesian motion control.

In further preferred embodiments, we take further advantage of the (x,z) decoupling effect of the pantograph to include payload counterbalancing e.g. with a pneumatic cylinder in parallel with z-drive actuator (see Figures 4b, 4c) and/or add an additional counterbalancing feature to compensate for the weight of the arm itself, e.g. with a spring or cylinder attached to the first primary member 25 (see Figures 6, 7). The use of such payload balancing methods is a particular benefit derived from the use of the pantograph kinematics and offers great functional advantages in terms of realising a machine with high passive compliance.

In some embodiments, and as shown in Figure 1, the motion coupling mechanism comprises a pin-jointed member 27 linking input motion applied to the drive member 23 at D1, to output motion at a distal end of the second primary member 29. In other embodiments, the motion coupling mechanism comprises a motion coupling member having a translating element held at a constant offset from the other (opposing) side of the parallelogram (for example, using a rack and pinion, a belt or chain drive), instead of a pin-jointed member.

Figure 2 shows a preferred constant offset or non-collapsing motion coupling mechanism realised with a geared pantograph mechanism in the form of a rack and pinion arrangement. Figure 2 illustrates the core features of one preferred embodiment.

A disadvantage of a pin-jointed parallelogram such as that in Figure 1 is that it geometrically collapses as the arm is actuated and it approaches a mechanical singularity (straight line form). This leads to reduced stiffness of the mechanism and very high internal forces within the parallelogram members, which will ultimately lead to mechanical failure. To avoid this, mechanisms employing pin-jointed parallelogram linkages must limit their range of motion to keep the parallelogram suitably far from its collapsed, singular form. The non-collapsing / constant offset motion coupling mechanisms disclosed herein and shown in Figures 2 and 4-9 are not subject to

this limitation. The motion coupling mechanism that links input motion applied to the drive member 23 to output motion at a distal end of the second primary member 29 preferably has a 1:1 gear ratio.

Figure 3 is a flow chart which reflects how the present technology is different from other robot arm designs. In some embodiments, the actuation mechanism is a decoupled actuation mechanism, configured to provide independent, decoupled driving in two orthogonal axes providing the ability to achieve a pure straight-line (linear) single-axis motion of a working platform at R1 from corresponding pure straight line (linear) single-axis drive input from an actuator, enabled by the motion coupling mechanism.

A key feature of the present design is the decoupling of driving motion in 2 axes through the pantograph mechanism. Key advantages of this are simplification of control, and splitting out of gravity axis motion and forces, allowing easy counterbalancing of loads, and as a result permitting more passively compliant drive systems.

When compared to the first three items in the kinematics comparison table (generic serial, generic parallel and typical palletiser), such a separation of axes does not exist. The position of the tip of the arm / tool in a given axis is a function of more than one drive input (even if ignoring the base yaw axis).

The Cartesian robot is a special case of the generic serial robot where the axes have been specifically arranged in a way that such axis separation does exist. The key differentiation of the present design compared to this is:

- The Cartesian robot is effectively 3 separate single-axis motion stages stacked one on top of the other. This means that not only does a move in, say, the x-axis move the tool tip in the x-axis, but all the rest of the mechanical structure of subsequent axes also move the same amount in the x-axis. This leads to restrictions in the form factor of such a machine – the machine necessarily "sweeps" a rectangular volume, meaning clearance must be allowed for this whole volume.
- A further characteristic is that the drives (motors) of the later axis stages (i.e. after the first one) must be mobile (since they are attached to their local axis stage). This has disadvantages in terms of cable routing across multiple axes.
- In contrast, our design permits the same decoupled input-to-output motion control, but by routing it through a pantograph mechanism, allows the machine to take a form-factor comparable to a typical robot arm, which is inherently more compact and adaptable to restricted workspaces.
- Further, the axis drives may all be kept on the "input" side of the arm, rather than being distributed across serially stacked axes. This greatly eases cable routing issues.

Implementation of the present technology is now discussed in more detail.

Figure 4a is a schematic view of a first preferred system embodying the present disclosure. In addition to the robotic manipulator arm that forms a pantograph mechanism as shown in Figure 2, the system of Figure 4a comprises a base 14, to which the arm is pivotally attached. Mounted on the base 14 is a drivetrain for moving the arm, comprising first and second slide mechanisms, the first slide mechanism comprising a first actuator 17 comprising a motor M2, a first linear slide rail 18 and a first slider or sliding plate 19, the second slide mechanism comprising a second linear slide rail 20, a second (drive) slider or drive link 22 and a second linear actuator 21 comprising a motor M3. The first slide rail 18 carries the first slider 19 and provides vertical movement. The first slider 19 is driven by the first linear actuator 17, shown here as a motorised ball screw device comprising the motor M2.

Mounted on the first slider 19 is the horizontal second linear slide mechanism 20, 21, 22 at a perpendicular orientation to the first slide mechanism 17, 18, 19. The second (drive) slider 22 is shown here in a vertical orientation and is driven by the second linear actuator 21, also shown here as a motorised ball screw device, comprising the motor M3. The drive slider 22 is pivotally connected at its distal end to a drive member 23, which connects to the arm. Details of this connection and how the arm is driven are described later.

The core structure of the articulated arm comprises the first and second primary members 25, 29 as shown in Figure 2. The proximal end of the first primary member 25 is pivotally/rotationally joined to the base 14, and the distal end of the first primary member 25 is pivotally/rotationally joined to the proximal end of the second primary member 29. The distal end of the second primary member 29 may optionally be pivotally/rotationally jointed to a working element or platform 31 (not shown).

The pantograph mechanism effectively transfers 2-axis (or greater) input applied to the drive member 23 to corresponding (preferably scaled) 2-axis (or greater) output at the distal end of the second primary member 29 (or working platform 31). The arm thus has two (or greater) degrees of freedom. The scaling may be any suitable ratio, including 1:1, a reduction or an enlargement.

The arm mechanism is movable by the linear mechanisms 18, 19, 20, 21 via a drivable link mechanism comprising the drive slider 22 and the drive member 23. The drive slider 22 is connected at its distal end to the drive member 23 at a proximal end thereof. The drive member 23 is rotationally connected to a point on the first primary member 25.

The distal end of the drive member 23 carries a mechanism for the conversion of rotary motion to linear motion. This mechanism acts between the distal end of the drive member 23 and the proximal end of the motion coupling member 27. The rotary to linear motion conversion is shown here (and in Figure 2) as a rack and pinion-type arrangement.

In this embodiment, at least the proximal and distal ends of the motion coupling member 27 comprise the rack, as shown in Figures 2, 4a, 4b, 4c. The rack at the proximal end of the motion coupling member 27 engages with the distal end of the drive member 23, which comprises a pinion 23' for engaging with the rack. The distal end of the motion coupling member 27 similarly engages with the proximal end 29' of the second primary member 29 of the articulated arm, which also comprises a pinion, as shown in Figure 4a (and 4b, 4c), linking movement of the first and second primary members 25, 29 with respect to the base 14. The rack and pinion coupling at the distal end of the motion coupling member 27 converts linear to rotary motion in an equivalent (inverted) way to the similar joint at the proximal end of the motion coupling member 27.

The motion coupling member 27 is located/configured in such a way as to permit it to undergo longitudinal translational motion – in Figure 4a (and 4b, 4c), this is by using motion constrainers 26 in the form of brackets 26 carrying rollers, with the rack and pinion system forming a linear gearing arrangement. In other embodiments, a drivetrain or transmission might be used, for example comprising one or more timing belt(s), pulley(s), linkage(s), motor(s), sprocket(s), gear(s), chain(s), hydraulic or pneumatic actuator(s), drive shaft(s) and/or electronic equivalents. In the embodiment of Figure 4a (and 4b, 4c), the motion coupling member 27 undergoes longitudinal translational motion in parallel with the first primary member 25. The longitudinal motion of the motion coupling member 27 serves to transmit the input driving motion at the proximal end of the drive member 23 to the output motion of the working platform 31, thus is part of the (XZ) motion drivetrain.

The arrangement described and illustrated in Figure 4a (and 4b, 4c) causes a fixed relationship to exist between the motion of the linear actuators 17, 21 driving the perpendicular slide mechanisms 18, 19, 20, 22 and the motion of the working platform 31. With an appropriate geometry of the members of the mechanism, this relationship can be such that planar movement of the first drive actuator 17 in the pure Z-axis results in a pure (planar) translation in the Z-axis of the working platform 31, and planar movement of the second drive actuator 21 in the pure X-axis results in pure (planar) translation in the X-axis of the working platform 31. The relationship will be linear, with a scaling factor dictated by the geometry of the links, as is illustrated in Figure 2 and discussed above.

Preferably, the first and second linear mechanisms 18, 19, 20, 22 are configured to operate in series (e.g. as shown) to provide planar horizontal and/or planar vertical movement of the drivable link mechanism 22, 23 with respect to the base 14, which in turn provides planar horizontal and/or

planar vertical movement of the working platform 31 with respect to the base 14 via the arm mechanism.

In order to counterbalance the load applied to the working platform 31, a balance force may optionally be applied between a moving part of the arm mechanism (including the arm driving mechanism) and the base 14, as discussed with respect to Figures 4b, 4c below.

Any linear actuators may be suitable for driving the arm mechanism. Examples include lead/ball/roller screw devices, pneumatic/hydraulic cylinders, linear motors, voice coil actuators and rotary prime movers (e.g. electric motor) with a suitable mechanism such as a cam or linkage arrangement.

Figure 4b is a schematic view of a second preferred system embodying the present disclosure. Compared to Figure 4a, the system of Figure 4b (and Figure 4c) additionally comprises a working platform 31 connected to the distal end of the second primary member 29, a first mechanism to constrain the orientation of the working platform 31, a force balance mechanism and a (driven) rotational axis, where a (rotatable) base 14 is supported on a fixed base 12 via a bearing mechanism 13, with rotation of the base 14 actuated by an actuator device comprising a motor M1.

In Figure 4b (and 4c), the working platform 31 carries an end effector or manipulator 34, shown here as a generic vacuum cup on an extension element 33. This may be locally rotated by an actuator, shown in Figure 4b and 4c as comprising a motor M4. The manipulator 34 preferably has a rotation axis that is parallel to a rotation axis of the base 14 – in Figure 4b (and 4c), both such rotation axes are vertical. In other embodiments, a rotatable linear actuator may be used, such as a motorised ball screw device or pneumatic cylinder mounted on the motor M4 to provide e.g. fine tuning movement. In yet further embodiments, any other actuator(s) and/or end effector(s) may be used and e.g. mounted on the working platform 31.

In order to control the orientation of the working platform 31, a constraining mechanism may be included. In exactly the same way that the pantograph can be achieved with one of:

- a pin jointed linkage (Figure 1)
- a rack and pinion (Figures 2, 4a-4c)
- a belt / chain and pulley/sprocket (Figure 7)

we have similar choices with the mechanism to constrain the orientation of the working platform 31.

A first belts and pulleys (or equally, chains and sprockets) embodiment is discussed here with respect to Figure 4b, and an alternative (second) system using a set of 3 pin jointed orientation-constraining members 24, 28 and 30 is discussed with respect to Figure 4c below.

In Figure 4b, we add the following parts to Figure 4a to constrain the orientation of the working platform 31:

- a first pair of orientation control pulleys 39, 40 (comprising first and second orientation control pulleys 39, 40) connected by a first orientation control belt 41
- a second pair of orientation control pulleys 42, 43 (comprising third and fourth orientation control pulleys 42, 43) connected by a second orientation control belt 44

The pulleys are mounted in the following way:

- the first pulley 39 of the first pair is coincident with the pivot point between the base 14 and the proximal end of the first primary member 25
    - pulley 39 does not rotate, i.e. it is rigidly fixed with respect to the base 14
- the second pulley 40 of the first pair and the first pulley 42 of the second pair are coincident with the joint between the first primary member 25 and the second primary member (29)
    - pulleys 40 and 42 cannot rotate independent of each other (they are rigidly coupled/connected together)
    - the coupled pulleys 40 and 42 can rotate freely with respect to both the first and second primary members 25, 29
- the second pulley 43 of the second pair is coincident with the pivot point between the second primary member 29 and the working platform 31
    - pulley 43 is free to rotate with respect to the second primary member 29, but is rigidly fixed to the working platform 31
- the gear ratio between pulleys 39 and 43 is preferably 1:1
- the two pairs of pulleys (and connecting belts) are only drawn at different sizes for visual clarity; they may be of either the same or different sizes to each other.

This combination of belts and pulleys (or equivalent chains and sprockets) has the function of constraining the orientation of the working platform 31 to remain constant as the arm moves through its working envelope. This functionality can also be achieved with a set of orientation-constraining members 24, 28, 30 of Figure 4c below.

The advantage of this belt-based system over the pinned links of Figure 4c is exactly as already discussed in respect of the pantograph above, namely that the parallelograms formed by the pinned links (Figure 4c) undergo geometric collapse as the arm changes pose, limiting the working envelope of the machine. In contrast, the belt system does not change geometry as the arm moves, allowing a larger working volume for a given size of arm.

The system of Figure 4b further comprises a rotatable base 14 supported on a fixed base 12 via a bearing mechanism 13, with rotation of the base 14 actuated by an actuator device comprising a motor M1.

Figure 4c is a schematic of a third preferred embodiment of the technology disclosed and illustrates key features of a mechanical system in an XZ plane comprising the pantograph arm mechanism of Figures 2 and 4a with optional orientation-constraining members 24, 28 and 30 that are configured to maintain a working platform 31 at a constant orientation relative to the ground as the arm articulates to any position, as an alternative to the arrangement of Figure 4b.

As in Figure 4b, the system of Figure 4c comprises a rotatable base 14 supported on a fixed base 12 via a bearing mechanism 13, with rotation of the base 14 actuated by an actuator device comprising a motor M1. Mounted on the rotatable base 14 is the drivetrain of Figure 4a.

In order to maintain the constant orientation of the working platform 31, instead of the belts and pulleys of Figure 4b, this embodiment comprises a set of orientation-constraining link members 24, 28, 30 arranged between the base 14 and the working platform 31 in the manner shown, which forms a parallelogram linkage comprising a pair of coupled parallelograms pivotally connected with respect to one another between the base 14 and the working platform 31.

As shown in Figure 4c, specifically, the parallelogram linkage may comprise:

the first primary member 25 pivotally connected at a proximal end thereof to optional base 14 and pivotally connected at a distal end thereof to a proximal end of the second primary member 29 and to the second link member 28;

the first link member 24 pivotally connected at a proximal end thereof to the base 14 and pivotally connected at a distal end thereof to the second link member 28;

the second primary member 29 pivotally connected at a proximal end thereof to the first primary member 25 and to the second link member 28, and pivotally connected at a distal end thereof to the working platform 31; and

the third link member 30 pivotally connected at a proximal end thereof to the second link member 28 and pivotally connected at a distal end thereof to the working platform 31.

In Figure 4c, the first link member 24 is connected to the base 14 at a different x-axis location to the base connection of the first primary member 25, but the members 24, 25 are preferably connected to the base 14 in parallel as shown, preferably connected to the base 14 at the same y- and z- axis locations for simplicity. Also, the first primary member 25 is pivotally connected at the distal end thereof to both the proximal end of the second primary member 29 and to the second link member 28 at a common pivotal joint, whilst the first link member 24 and the third link member 30 are pivotally connected to the second link member 28 at different locations to one another and different to the common pivotal joint, thus forming the parallelograms. As shown, the first link member 24 pivotally connects to a proximal end of the second link member 28 and the third link member 30 pivotally connects to a distal end of the second link member 28, whilst the first primary

member 25 and the second primary member 29 are both pivotally connected to the link member 28 at an intermediate common pivotal joint.

The orientation of the working platform 31 is governed by the parallelograms 14, 24, 25, 28; and 28, 29, 30, 31.

Again, in order to counterbalance the load applied to the working platform 31, a balance force may optionally be applied between a moving part of the arm mechanism (including the arm driving mechanism) and the base 14. In the embodiment of Figure 4c, the balance force is applied between the base 14 and the slider 19 as shown, preferably in parallel with the action of the first linear actuator 17. Here, this balance force is shown generated by a force balance element 15 applying a balance force to the slider 19, which connects to the arm via the link mechanism 22, 23, in the form of a pneumatic pressure cylinder. With the counterbalancing force set for any given load on the working platform 31, the nature of the mechanism described above causes that force to maintain the balancing effect regardless of translation of the working platform 31 in the (X, Z) plane.

A change in load applied to the working platform 31 – for example by picking up and putting down items – can be compensated by adjusting the counterbalance force applied by the force balance element 15. This may be achieved e.g. by adjusting the pressure in the cylinder 15. By thus counterbalancing the load on the arm, the drive actuators 17, 21 are not required to be able to supply sufficient force to overcome this load. The use of a relatively low force drivetrain allows the system to have a high passive compliance.

In other embodiments, the balance force may be applied to the arm directly, to the link mechanism 22, 23, to the first 17, 18, 19 and/or second 20, 21, 22 slide mechanisms and/or to the base 14, to balance the load on the working platform 31. Key benefits to applying the balancing force between the base 14 and the slider 19 as in Figure 4c include i) the required balancing force magnitude is independent of the XZ position of the working platform 31, and ii) the motion of the slider 19 relative to the base 14 is constrained to a single straight line, making force application straightforward. Other balancing implementations may be used, although they are typically more mechanically complicated and may require active force modulation to achieve uniform balancing as the working platform 31 moves in the XZ plane.

Figure 5 illustrates an alternative embodiment where the rack-and-pinion type gear linkage of Figure 4b is replaced with a pulley and belt drive.

Specifically, in the Figure 5 embodiment, the motion coupling mechanism comprises two pulleys: a first, proximal pulley 23' rigidly connected to the distal end of the drive member 23, and a second,

distal pulley 29' rigidly connected to the proximal end of the second primary member 29. The two pulleys are connected by a motion coupling member in the form of a belt 27. The gear ratio of this transmission is again preferably 1:1.

The belt 27 may be of any appropriate type, with appropriate corresponding pulleys (flat, v-profile, toothed etc.). A further alternative embodiment (not shown) involves a similar transmission, but with the pulleys 23', 29' replaced with sprockets and the belt 27 replaced with a chain 27.

All other features in Figure 5 are as already discussed in Figure 4b. Note that the Figure 5 embodiment has two separate, independent belt (and/or chain) transmission subsystems. The first subsystem comprising pulleys 23' and 29' and the belt 27 governs the overall motion of the arm (forming part of the pantograph kinematic chain). Separately, the second subsystem comprising pulleys 39, 41, 42 and 43, and belts 41 and 44 governs the orientation of the working platform 31 relative to the base 14. Note in particular the arrangement at the common junction between the first and second primary members 25, 29:

- pulley 29' is rigidly fixed to second primary member 29
- second primary member 29 is rotationally fixed to first primary member 25
- pulleys 40 and 42 are rigidly connected to each other
- the rigid sub-group of pulleys 40 and 42 is mounted to be free to rotate with respect to both the first primary member 25 and the second primary member 29

Figure 6 illustrates a further embodiment where the system of Figure 4b is modified to additionally counterbalance the weight of the arm itself. In the Figure 6 embodiment, an additional force is applied to the system to counterbalance the weight of the arm. This is distinct and in addition to the optional counterbalancing force from the force balance element 15, which balances only the weight at the working platform 31.

There are numerous ways to achieve a counterbalance of the arm's own weight. Figure 6 shows one representative embodiment where an arm weight balance element 38 in the form of a spring is attached between the first primary member 25 and a fixed point on (or connected to) the base 14. The spring rate and exact mounting points are chosen based on the mass to be counterbalanced. In further embodiments, the arm weight balance element 38 may be replaced by another force element, such a gas strut or a pneumatic cylinder.

Addition of such arm weight counterbalancing gives the advantage that the first and second drive actuators 17, 21, comprising motors M2, M3 for driving the arm do not have supply forces to overcome the effect of gravity on the arm, meaning they are using lower forces, which facilitates better compliance.

Figure 7 illustrates a variant of the embodiment of Figure 6, wherein the arm weight balance element 38 comprises a pneumatic cylinder, and the point of attachment to the base 14 is moved with respect to the Figure 6 embodiment appropriately, according to the direction of the force. In further embodiments, the point of attachment of the arm weight balance element 38 to the arm and/or to the base 14 is moveable, which may provide adjustable tension e.g. when using a resilient member for the arm weight balance element 38.

Figure 8 shows an implementation of the arm of Figure 4b in a horizontal (XY) plane. It is equivalent to the implementation of Figure 4b in an XZ plane, without the (optional) force balance element 15 and where the end effector apparatus 34 is rotated so as to keep it in a vertical plane (the arm now being horizontal). Although not shown and not essential, an arm or combined arm/payload weight balance element 38 may be provided in the gravity Z-axis.

Figure 9 is a schematic view of a seventh preferred system embodying the present disclosure. This embodiment builds on the Figure 4b system, where use of the belt system of Figure 4b provides an additional opportunity for a new axis of movement:

- instead of the first pulley 39 of the first pair 39, 40 being fixed rigidly with respect to the base, the pulley 39 is mounted (still in the same location) such that it can rotate with respect to both the base and the first primary member 25
    - an additional platform orientation drive actuator 45 (e.g. comprising a motor M5) can then be added which controls the rotation of the pulley 39.

With this change, the new motor M5 (which, advantageously is still located in the base 14 rather than remotely on the arm) now gives control of the orientation of the working platform 31. This platform 31 therefore no longer has to remain horizontal, but can be controlled to rotate about the pivot connecting it to the second primary arm. This is an extra axis of movement.

In Figure 9, the motor M5 has a platform orientation drive connection member 46 in the form of a belt to connect to the pulley 39. Equally, the motor M5 could connect directly to the pulley (without a belt), or else another actuator / gear train could be used (mechanical gears, chain and sprocket, flexible coupling etc.).

In the illustrated embodiments, the force balance element 15 comprises a low friction pneumatic cylinder. Preferably, the system further comprises a fluid (gas or liquid) pressure regulator configured to adjust the balance force applied by the pneumatic cylinder 15, but may be by any other suitable means. This adjustment can be achieved by changing the pressure in the balance cylinder 15. In other embodiments, other force balance elements may be used, such as hydraulic cylinders, a pneumatic or hydraulic piston, or a gas strut, servo systems or other electric or electromechanical members, springs or other resilient members (preferably with adjustable pre-

tension), which may be used singly, separately or in any combination. Further, any of the above actuators driven by an electric motor may be used with suitable current / force control algorithms. Such force balance elements may also be used for the arm weight balance element 38.

The present disclosure further contemplates corresponding configuring of a mechanical arm system in accordance with the above, as well as kits of parts comprising any one or more of the various elements used, which particularly may or may not include the actuators used to drive the arm mechanism and/or the base 14 or fixed base 12. The present disclosure further contemplates computer-readable instructions that perform the method and computer-readable instructions for 3D printing any one or more elements of the system.

When used in this specification and claims, the terms "comprises" and "comprising" and variations thereof mean that the specified features, steps or integers are included. The terms are not to be interpreted to exclude the presence of other features, steps or components.

The invention may also broadly consist in the parts, elements, steps, examples and/or features referred to or indicated in the specification individually or collectively in any and all combinations of two or more said parts, elements, steps, examples and/or features. In particular, one or more features in any of the embodiments described herein may be combined with one or more features from any other embodiment(s) described herein.

Protection may be sought for any features disclosed in any one or more published documents referenced herein in combination with the present disclosure.

Although certain example embodiments of the invention have been described, the scope of the appended claims is not intended to be limited solely to these embodiments. The claims are to be construed literally, purposively, and/or to encompass equivalents.

INDEX TO REFERENCE NUMERALS

12	fixed base
13	bearing mechanism
14	base
15	force balance element
17	first drive actuator
18	first linear slide rail
19	first slider
20	second linear slide rail
21	second drive actuator
22	second (drive) slider
23	drive member
24	first orientation-constraining member or link member
25	first primary member
26	motion constrainers
27	motion coupling member
28	second orientation-constraining member or link member
29	second primary member
30	third orientation-constraining member or link member
31	working platform
33	extension element
34	end effector
38	arm weight balance element
39	first orientation control pulley
40	second orientation control pulley
41	first orientation control belt
42	third orientation control pulley
43	fourth orientation control pulley
44	second orientation control belt
45	platform orientation drive actuator
46	platform orientation drive connection member

REPRESENTATIVE FEATURES

Representative features are set out in the following clauses, which stand alone or may be combined, in any combination, with one or more features disclosed in the text and/or drawings of the specification.

A. A mechanical manipulation device having a cylindrical work envelope, a variable load balancing capability, a high inherent compliance and a decoupled Cartesian position driving mechanism, comprising:
- a fixed base part to be mounted to reference surface
- a rotating base part mounted on the fixed base part, typically rotating about an axis substantially vertical with reference to gravity
- an articulated mechanical arm mechanism comprising at least two links, wherein the proximal end of the said mechanical arm is connected to the rotating base part on the fixed base part, and wherein the distal end of the said mechanical arm is connected to a manipulator.

B. The mechanical manipulation device of clause A, the articulated mechanical arm mechanism functionally forming a geared pantograph, broadly comprising first and second arm sections, wherein the first arm section is composed of a parallelogram in which one of the long edges is attached to the short edges by geared joints (e.g. of the rack and pinion type), and wherein the second arm section forms an extension of the outermost short edge of the parallelogram forming the first arm.

C. The mechanical manipulation device of clause B, further comprising a pin-jointed coupled-parallelogram mechanism arranged between the rotating base part and the distal end of the pantograph mechanism in such a way as to maintain a plate connected at said distal end of the pantograph mechanism at a constant orientation with respect to a ground-fixed reference frame for all positions of the manipulation device.

D. The mechanical manipulation device according to any of the preceding clauses, further including means for driving the articulated mechanical arm mechanism comprising two linear actuators which are arranged across two serial mounted, perpendicular linear slide mechanisms, with the actuators functioning to provide an "input" to the pantograph mechanism, with the distal end of the articulated mechanical arm following an equivalent path multiplied by a scaling factor.

E. The mechanical manipulation device according to any of the preceding clauses, further including means to balance a load placed at the end of the articulated mechanical arm through a force generating actuator, which applies force to the articulated mechanical arm together with the driving linear actuators by way of the two serial, perpendicular linear slide mechanisms.

F. The mechanical manipulation device according to clause E further including means of adjusting the force output of the force generating actuator in response to changes of load applied to the end of the articulated mechanical arm (for instance, a pressure regulating device controlled by a computerised control algorithm which acts in response to a measurement of the applied load supplied by a sensing device to change the pressure in a cylinder, which supplies the compensating force).

G. The mechanical manipulation device according to any of the preceding clauses, further including an apparatus attached at the distal end of the articulated mechanical arm to achieve a rotating motion of an end-effector device and/or load about an axis, which may typically be oriented vertically with respect to gravity.

H. A mechanical system, comprising:

an articulated arm mechanism forming a parallelogram linkage, comprising first and second primary members (25, 29), first, second and third link members (24, 28, 30) and a motion coupling member (27); and

a working platform (31) connected to a distal end of the articulated arm,

wherein the arm mechanism is configured to maintain the working platform (31) at a constant orientation relative to the ground as the arm articulates to any position.

I. A mechanical load handling device comprising:

a two degree-of-freedom articulated arm comprising at least four links arranged in a parallelogram configuration, such that a 2-axis driving motion applied at a single input point on the mechanism is translated to a corresponding scaled 2-axis output motion at a single output point on the mechanism; and

optionally, a method of powered actuation to control the position of the input point of the articulated arm in two degrees of freedom; and

a working platform configured to handle a workpiece connected to the output point of the articulated arm,

wherein the orientation of the working platform is maintained at a constant value regardless of the position of the articulated arm by a set of (non-driven) secondary links; and

optionally, a method of applying a biasing force (in addition to driving forces) to the input point on the mechanism in order to balance the forces arising due to the mass of the working platform and/or workpiece.

J. A mechanical system comprising:

an articulated arm arranged as a pantograph mechanism, comprising first and second primary members (25, 29), a motion input member (23) and a motion coupling member (27);

a working platform (31) connected to a distal end of the articulated arm;

first, second and third link members (24, 28, 30) configured to maintain the working platform (31) at a constant orientation relative to the ground as the arm articulates to any position; and

a decoupled actuation system configured to act on the input member (23) to drive motion of the working platform (31).

1. A mechanical system, comprising:

an articulated arm mechanism forming a parallelogram pantograph linkage, comprising first and second primary members (25, 29), first, second and third link members (24, 28, 30), a motion coupling member (27) and a working platform (31) at a distal end of the articulated arm, wherein the linkage forms:

a first parallelogram comprising the first primary member (25) and the first and second link members (24, 28);

a second parallelogram pivotally connected to the first parallelogram and comprising the second primary member (29), the second and third link members (28, 30) and the working platform (31) at a distal end; and

a third parallelogram comprising the motion coupling member (27) and the first primary member (25), wherein:

the third parallelogram is non-collapsing and/or the motion coupling member (27) opposes the first primary member (25) and is configured to be maintained at a constant offset from the first primary member (25) as the motion coupling member (27) translates in use.

2. The system of clause 1, wherein:

the third parallelogram comprises at least part of a drivetrain, such as a linear gearing drivetrain, linking movement of the first and second primary members (25, 29), preferably wherein the drivetrain comprises one or more timing belt(s), pulley(s), linkage(s), motor(s), sprocket(s), gear(s), chain(s), rack(s) and pinion(s), hydraulic or pneumatic actuator(s), drive shaft(s) and/or electronic equivalents; or

the motion coupling member (27) and/or the second primary member (29) form(s) at least part of a drivetrain, such as a linear gearing drivetrain, linking movement of the first and second primary members (25, 29), preferably wherein the drivetrain comprises one or more timing belt(s), pulley(s), linkage(s), motor(s), sprocket(s), gear(s), chain(s), rack(s) and pinion(s), hydraulic or pneumatic actuator(s), drive shaft(s) and/or electronic equivalents.

3. The system of any preceding clause, wherein the arm has two or more degrees of freedom and the system comprises a two or higher degree of freedom drivable link mechanism (22, 23)

connected to the motion coupling member (27) and pivotally connected to the first primary member (25); and

the third parallelogram comprises:

the motion coupling member (27) opposing the first primary member (25); and

at least part of the drivable link mechanism (22, 23) opposing at least part of the second primary member (29).

4. The system of any preceding clause, wherein:

the motion coupling member (27) is configured to undergo longitudinal translational motion to transmit input driving motion of the arm to output motion of the working platform (31); and/or

the arm is configured to provide pure linear, single-axis motion of the working platform (31) from pure linear, single-axis motion input from an actuator; and/or the system comprises a decoupled actuation system configured to drive the working platform (31) and 2-axis driving input motion applied at the link mechanism (22, 23) is translated to corresponding scaled 2-axis output motion at the working platform (31).

5. The system of any preceding clause, wherein the first and second parallelograms are coupled at a common pivotal joint on the second link member (28); and/or

the first primary member (25) is pivotally connected at a distal end thereof to both the proximal end of the second primary member (29) and to the second link member (28) at a common pivotal joint.

6. The system of any preceding clause, further comprising:

a static or rotatable base (14), wherein the articulated arm mechanism is connected at a proximal end thereof to the base (14); and/or

a force balance element (15) configured to balance a load on the working platform (31) in use; and/or

an arm weight balance element (38) configured to balance the weight of the arm.

7. The system of clause 6, wherein the linkage comprises:

the first primary member (25) pivotally connected at a proximal end thereof to the base (14) and pivotally connected at a distal end thereof to a proximal end of the second primary member (29) and to the second link member (28);

the first link member (24) pivotally connected at a proximal end thereof to the base (14) and pivotally connected at a distal end thereof to the second link member (28);

the second primary member (29) pivotally connected at a proximal end thereof to the first primary member (25) and to the second link member (28), and pivotally connected at a distal end thereof to the working platform (31); and

the third link member (30) pivotally connected at a proximal end thereof to the second link member (28) and pivotally connected at a distal end thereof to the working platform (31).

8. The system of clause 6 or 7, comprising the drivable link mechanism (22, 23) connected between the base (14) and the arm, configured to provide planar horizontal and/or planar vertical movement of the working platform (31) with respect to the base (14).

9. The system of clause 8, wherein the drivable link mechanism (22, 23) is translatable horizontally and/or vertically by one or more linear mechanisms (18, 20), the system preferably comprising two or more serial perpendicular slide mechanisms (18, 20).

10. The system of any of clauses 6 to 9, wherein the force balance element (15) is configured to apply a balance force to the mechanical arm, the drivable link mechanism (22, 23), one or more of the linear mechanisms (18, 20) and/or the base (14), to balance the load on the working platform (31) in use.

11. The system of any of clauses 6 to 10, wherein the force balance element (15) and/or the arm weight balance element (38) comprise(s) a pneumatic cylinder, a hydraulic cylinder, a pneumatic or hydraulic piston or gas strut, a servo system, a spring or other resilient member, preferably with adjustable pre-tension, any other electric or electromechanical members and/or an actuator driven by an electric motor.

12. The system of any of clauses 6 to 11, wherein the arm weight balance element (38) is attached:

between the first primary member (25) and the base (14); or

between a fixed point on the first primary member (25) and a fixed point on the base (14); or

between a point on the first primary member (25) and a point on the base (14), wherein at least one of the attachment points is moveable.

13. The system of any of clauses 8 to 12, wherein the drivable link mechanism (22, 23) comprises a drive link (22) drivable by the first and second linear mechanisms (18, 20) and pivotally connected to a drive member (23), the drive member (23) being pivotally or rigidly connected to the first primary member (25).

14. The system of any of clauses 8 to 13, wherein the motion coupling member (27) and optionally at least part of the drivable link mechanism (22, 23) comprise a drivetrain, linking movement of the first and second primary members (25, 29) with respect to the first and second linear mechanisms (18, 20), preferably wherein the drivetrain comprises one or more timing belt(s),

pulley(s), linkage(s), motor(s), sprocket(s), gear(s), chain(s), hydraulic or pneumatic actuator(s), drive shaft(s) and/or electronic equivalents.

15. The system of any preceding clause, wherein:

the motion coupling member (27) comprises a rack (27) and brackets with rollers (26) and at least part of the drivable link mechanism (22, 23) comprises a pinion (23) for engaging with the rack (27) and thereby linking the rack (27) with the first primary member (25); and preferably the second primary member (29) comprises a pinion at a proximal end thereof, for engaging with the rack (27); or

the motion coupling member comprises a belt or chain (27) with pulleys or sprockets (26).

16. The system of any preceding clause, wherein:

the articulated arm is drivable via a rack (27) and pinion (23) linkage;

the pinion (23) is rotationally connected to a distal end of a rigid drive link (22), the rigid drive link (22) connecting the pinion (23) to first and second linear mechanisms (18, 20) in the base (14);

the pinion (23) is rotationally connected to a point on the first primary member (25); and

the second primary member (29) comprises a pinion for engaging with the rack (27);

or

the articulated arm is drivable via a belt or chain (27) and pulley or sprocket (26) drivetrain;

a drive member (23) is rotationally connected to a distal end of a rigid drive link (22), the rigid drive link (22) connecting the drivetrain to first and second linear mechanisms (18, 20) in the base (14), the drivetrain comprising:

a first pulley or sprocket (26) connected to the first primary member (25);

a second pulley or sprocket (26) connected to the second primary member (29); and

a belt or chain (27) connecting the first and second pulleys or sprockets (26), linking movement of the first and second primary members (25, 29).

17. The system of any of clauses 6 to 16, further comprising one or more rotary actuators (M1) configured to rotate the base (14), preferably about a vertical axis; and/or

further comprising one or more linear actuators (17, 21) configured to drive the mechanical arm, preferably configured to operate in series and/or to translate the working platform (31) linearly horizontally and/or vertically; and/or

further comprising one or more rotary actuators (M4) configured to rotate a manipulator (34) mounted on the working platform (31), the manipulator (34) preferably having a rotation axis that is parallel to a rotation axis of the base (14).

18. The system of clause 17, wherein:

the or each rotary actuator (M1, M4) comprises a motor; and/or

the or each linear actuator (17, 21) comprises a motorised ball screw device.

19. The system of any of clauses 6 to 18, wherein the force balance element (15) is configured to apply a variable balance force to the mechanical arm, the drivable link mechanism (22, 23), one or more of the linear mechanisms (18, 20), the sliding plate (19) and/or the base (14), to balance a variable load on the working platform (31), preferably further comprising a sensor configured to measure the load on the arm, more preferably wherein the system is configured to, in response to the measured load, adjust the balance force applied by the force balance element (15).

20. The system of any of clauses 6 to 19, wherein the force balance element (15) comprises a pneumatic cylinder (15) and the system further comprises a pressure regulator configured to adjust the balance force applied by the pneumatic cylinder (15); and/or

further comprising a fixed base (12), wherein the base (14) is rotatably joined to the fixed base (12), preferably by one or more bearing mechanisms (13).

21. A kit of parts comprising the first and second primary members (25, 29), first, second and third link members (24, 28, 30), the motion coupling member (27) and the

working platform (31) of any preceding clause, configurable to form the parallelogram pantograph linkage of any preceding clause.

22. A method of configuring a mechanical arm system, comprising:

configuring the kit or system of any preceding clause wherein the arm mechanism maintains the working platform (31) at a constant orientation relative to the ground as the arm articulates to any position.

23. The method of clause 22, further comprising:

measuring or calculating the load on the arm and in response, adjusting the balance force applied by the force balance element (15); and/or

controlling movement of the arm.

24. A computer program product or computer-readable storage medium comprising instructions which, when executed by a computer, cause the computer to carry out the method of any of clauses 22 to 23.

25. A robotic manipulator arm system, comprising:

a pantograph arm mechanism comprising first and second primary members (25, 29) pivotally connected together; and a motion coupling mechanism comprising a motion coupling member (27);

a drivable link mechanism (22, 23) connected to the first primary member (25);

an actuation mechanism configured to drive the link mechanism (22, 23) in at least two axes, wherein:

the motion coupling mechanism links input motion applied to the drivable link mechanism (22, 23) to output motion at a distal end of the second primary member (29); and

the pantograph arm mechanism is configured to receive driving input motion from the actuation mechanism at the link mechanism (22, 23) and produce geometrically similar, scaled output motion at the distal end of the second primary member (29).

26. A robotic manipulator arm system, comprising:

a mechanical arm that forms a pantograph mechanism, the arm comprising:

a first primary member (25) pivotally mounted to a fixed point or a base (14);

a second primary member (29) pivotally connected to the first primary member (25);

a drive member (23) connected to the first primary member (25); and

a motion coupling mechanism comprising a motion coupling member (27) that couples the drive member (23) to the second primary member (29); and

an actuation mechanism configured to drive the drive member (23) in at least two axes, wherein:

the motion coupling mechanism links input motion applied to the drive member (23) to output motion at a distal end of the second primary member (29); and

the arm is configured to receive driving input motion from the actuation mechanism at the drive member (23) and produce geometrically similar

27. A robotic manipulator arm system, comprising:

a mechanical arm with a kinematic chain that forms a pantograph mechanism, comprising a first primary member (25) pivotally mounted to a base (14); a second primary member (29) pivotally connected to the first primary member (25); a drive member (23) connected to the first primary member (25); and a motion coupling mechanism comprising a motion coupling member (27);) that couples the drive member (23) to the second primary member (29);

an actuation mechanism configured to drive the drive member (23) in at least two axes, wherein:

the motion coupling mechanism forms part of the kinematic chain that links the at least two axis input motion applied to a single point on the drive member (23) to output motion at a distal end of the second primary member (29); and

the kinematic chain of the arm is configured such that a two-axis driving input motion from the actuation mechanism at the proximal end of the drive member (23) produces geometrically similar, scaled output motion at the distal end of the second primary member (29).

28. A mechanism substantially as shown in any one or more of figures 1-9.

29. A system, kit of parts or method as claimed.

30. Any combination of features disclosed herein.

CLAIMS

1. A robotic manipulator arm system, comprising:

a mechanical arm that forms a pantograph mechanism, the arm comprising:

a first primary member (25) pivotally mounted to a fixed point or a base (14);

a second primary member (29) pivotally connected to the first primary member (25);

a drive member (23) connected to the first primary member (25); and

a motion coupling mechanism comprising a motion coupling member (27) that couples the drive member (23) to the second primary member (29); and

an actuation mechanism configured to drive the drive member (23) in at least two axes, wherein:

the motion coupling mechanism links input motion applied to the drive member (23) to output motion at a distal end of the second primary member (29); and

the arm is configured to receive driving input motion from the actuation mechanism at the drive member (23) and produce geometrically similar, scaled output motion at the distal end of the second primary member (29).

2. The system of claim 1, wherein the mechanical arm comprises a kinematic chain that forms a pantograph mechanism and the motion coupling mechanism forms part of the kinematic chain linking input motion applied to a single point on the drive member (23) to output motion at a distal end of the second primary member (29).

3. The system of claim 1 or 2, wherein:

the actuation mechanism is a decoupled actuation mechanism, configured to provide independent, decoupled driving in two orthogonal axes; and

the arm is configured to receive decoupled driving input motion from the decoupled actuation mechanism at the drive member (23) and produce geometrically similar, scaled output motion at the distal end of the second primary member (29).

4. The system of any preceding claim, wherein the drive member (23) is pivotally connected to the first primary member (25) at a point preferably at or near a proximal end of the first primary member (25); and

the actuation mechanism is configured to apply decoupled driving input motion in at least two axes at a single point on the drive member (23).

5. The system of any preceding claim, wherein the motion coupling mechanism comprises a mechanical, electromechanical, hydraulic or pneumatic gear train mechanism, preferably

comprising one or more timing belt(s), pulley(s), linkage(s), motor(s), sprocket(s), gear(s), chain(s), rack(s) and pinion(s), hydraulic or pneumatic actuator(s), drive shaft(s) and/or electronic equivalents.

6. The system of any preceding claim, wherein:

first and second primary members (25, 29) are pivotally connected in series;

the motion coupling member comprises a rack (27);

the drive member (23) comprises a first pinion (23');

the second primary member (29) comprises a second pinion (29'); and

the rack (27) is configured to engage with the first and second pinions (23', 29').

7. The system of any preceding claim:

wherein the motion coupling member (27) is configured to undergo longitudinal translational motion to transmit the input motion applied to the drive member (23) to the geometrically similar, scaled output motion at the distal end of the second primary member (29); and/or

further comprising motion constrainers (26), such as brackets (26) with rollers, configured to constrain movement of the motion coupling member (27), preferably configured to maintain the motion coupling member (27) at a constant offset from the first primary member (25) as the motion coupling member (27) translates in use; or

wherein the motion coupling mechanism comprises a belt or chain (27) for engaging with a first pulley or sprocket (23') rigidly connected to or part of the drive member (23) and a second pulley or sprocket (29') connected to or part of the second primary member (29), at its proximal end.

8. The system of any preceding claim, wherein:

the motion coupling member comprises a rack, belt or chain (27);

the drive member (23) comprises a first pinion, pulley or sprocket (23') for engaging with a proximal end of the rack, belt or chain (27);

the drive member (23) is rotationally connected to a distal end of a rigid drive link (22), the rigid drive link (22) connecting the drive member (23) to first and second linear mechanisms (17, 18, 19, 20, 21, 22) in the base (14);

the drive member (23) is rotationally connected to a point on the first primary member (25); and

the second primary member (29) comprises a second pinion, pulley or sprocket (29') for engaging with a distal end of the rack, belt or chain (27); or

the drive member (23) is rotationally connected to a distal end of a rigid drive link (22), the rigid drive link (22) connecting the drive member (23) to first and second linear mechanisms (17, 18, 19, 20, 21, 22) in the base (14), the motion coupling mechanism comprising:

a first pinion, pulley or sprocket (23') rigidly connected to the drive member (23);

a second pinion, pulley or sprocket (29') rigidly connected to the second primary member (29); and

a rack, belt or chain (27) connecting the first and second pinions, pulleys or sprockets (23', 29'), linking input motion applied to the drive member (23) to output motion at a distal end of the second primary member (29).

9. The system of any preceding claim, wherein the system further comprises:

a working platform (31) at the distal end of the second primary member (29); and

first, second and third orientation-constraining members (24, 28, 30), wherein the first and second primary members (25, 29), the working platform (31) and the orientation-constraining members (24, 28, 30) form a pair of coupled parallelograms pivotally connected with respect to one another;

preferably wherein the coupled parallelograms are pivotally connected with respect to one another between a rotatable base (14) and the working platform (31);

preferably wherein the parallelograms are coupled at a common pivotal joint on the second orientation-constraining member (28);

further preferably wherein the first primary member (25) is pivotally connected at a distal end thereof to both the proximal end of the second primary member (29) and to the second orientation-constraining member (28) at a common pivotal joint.

10. The system of any preceding claim, wherein the system further comprises:

a working platform (31) at the distal end of the second primary member (29);

a first pair of pulleys or sprockets (39, 40) connected by a first belt or chain (41); and

a second pair of pulleys or sprockets (42,43) connected by a second belt or chain (44), wherein:

the first pulley or sprocket (39) of the first pair of pulleys or sprockets (39, 40) is coincident with a pivot point between a base (14) and a proximal end of the first primary member (25)

the first pulley or sprocket (39) of the first pair of pulleys or sprockets (39, 40) is rigidly fixed with respect to the base (14) or rotatably fixed with respect to both the base (14) and the first primary member (25);

the second pulley or sprocket (40) of the first pair of pulleys or sprockets (39, 40) and the first pulley or sprocket (42) of the second pair of pulleys or sprockets (42, 43) are coincident with the joint between the first primary member (25) and the second primary member (29), are rigidly coupled together and

can rotate freely with respect to both the first (25) and second (29) primary members;

the second pulley or sprocket (43) of the second pair of pulleys or sprockets (42, 43) is coincident with a pivot point between the second primary member (29) and the working platform (31) and is free to rotate with respect to the second primary member (29), but is rigidly fixed to the working platform (31).

11. The system of claim 10, wherein the first pulley or sprocket (39) of the first pair of pulleys or sprockets (39, 40) is rotatably fixed with respect to both the base (14) and the first primary member (25) and the system further comprises an actuator (45) configured to drive the first pulley or sprocket (39) of the first pair of pulleys or sprockets (39, 40), and thereby to drive and/or control the orientation of the working platform (31).

12. The system of claim 9 or 10, wherein the orientation-constraining members (24, 28, 30) or the first pair of pulleys or sprockets (39, 40) connected by the first belt or chain (41) and the second pair of pulleys or sprockets (42,43) connected by the second belt or chain (44), are configured to maintain the working platform (31) at a constant orientation relative to the ground as the arm articulates to any position.

13. The system of any preceding claim, further comprising:

a static or rotatable base (14), wherein the mechanical arm is connected at a proximal end thereof to the base (14); and/or

a force balance element (15) configured to balance a load on the arm or working platform (31) in use; and/or

an arm weight balance element (38) configured to balance the weight of the arm.

14. The system of claim 13, wherein the system comprises:

the first primary member (25) pivotally connected at a proximal end thereof to the base (14) and pivotally connected at a distal end thereof to a proximal end of the second primary member (29) and to the second orientation-constraining member (28);

the first orientation-constraining member (24) pivotally connected at a proximal end thereof to the base (14) and pivotally connected at a distal end thereof to the second orientation-constraining member (28);

the second primary member (29) pivotally connected at a proximal end thereof to the first primary member (25) and to the second orientation-constraining member (28), and pivotally connected at a distal end thereof to the working platform (31); and

the third orientation-constraining member (30) pivotally connected at a proximal end thereof to the second orientation-constraining member (28) and pivotally connected at a distal end thereof to the working platform (31).

15. The system of any preceding claim, wherein:

the actuation mechanism comprises two or more actuated linear mechanisms (17, 18, 19, 20, 21, 22) configured to drive the drive member (23) in the at least two axes; or

the actuation mechanism comprises two or more serial perpendicular actuated slide mechanisms (17, 18, 19, 20, 21, 22) configured to drive the drive member (23) in the at least two axes.

16. The system of any of claims 13 to 15, wherein the force balance element (15) is configured to apply a balance force to the arm, the drive member (23), one or more of the linear mechanisms (17, 18, 19, 20, 21, 22) and/or to the base (14), to balance a load on the working platform (31) in use; and/or

wherein the force balance element (15) and/or the arm weight balance element (38) comprise(s) a pneumatic cylinder, a hydraulic cylinder, a pneumatic or hydraulic piston or gas strut, a servo system, a spring or other resilient member, preferably with adjustable pre-tension, any other electric or electromechanical members and/or an actuator driven by an electric motor.

17. The system of any of claims 13 to 16, wherein the arm weight balance element (38) is attached:

between the first primary member (25) and the base (14); or

between a fixed point on the first primary member (25) and a fixed point on the base (14); or

between a point on the first primary member (25) and a point on the base (14), wherein at least one of the attachment points is moveable.

18. The system of any of claims 13 to 17, further comprising one or more rotary actuators (M1) configured to rotate the base (14), preferably about a vertical axis; and/or

further comprising one or more actuators (17, 21) configured to drive the slide mechanisms (18, 19, 20, 22) preferably configured to operate in series and/or to translate the working platform (31) linearly horizontally and/or vertically; and/or

further comprising one or more rotary actuators (M4) configured to rotate a manipulator (34) mounted on the working platform (31), the manipulator (34) preferably having a rotation axis that is parallel to a rotation axis of the base (14).

19. The system of claim 18, wherein:

the or each rotary actuator (M1, M4) comprises a motor; and/or

the or each actuator (17, 21) comprises a motorised ball screw device.

20. The system of any preceding claim comprising a force balance element (15) configured to balance a load on the arm or working platform (31) in use, wherein the force balance element (15) is configured to apply a variable balance force to the arm, the drive member (23), one or more of

the first and second linear mechanisms (17, 18, 19, 20, 21, 22) and/or the base (14), to balance a variable load on the working platform (31),

preferably further comprising a sensor configured to measure the load on the arm, more preferably wherein the system is configured to, in response to the measured load, adjust the balance force applied by the force balance element (15).

21. The system of any of claims 13 to 20, wherein the force balance element (15) comprises a pneumatic cylinder (15) and the system further comprises a pressure regulator configured to adjust the balance force applied by the pneumatic cylinder (15); and/or

further comprising a fixed base (12), wherein the base (14) is rotatably joined to the fixed base (12), preferably by one or more bearing mechanisms (13).

22. A kit of parts comprising the first and second primary members (25, 29), the drive member (23), the actuation mechanism and the motion coupling mechanism of any preceding claim, configurable to form the robotic manipulator arm of any preceding claim.

23. A method of configuring a robotic manipulator arm system, comprising:

configuring the kit or system of any preceding claim wherein the arm receives driving input motion from the actuation mechanism at the drive member (23) and produces geometrically similar, scaled output motion at the distal end of the second primary member (29).

24. The method of claim 23, further comprising:

measuring or calculating the load on the arm and in response, adjusting the balance force applied by the force balance element (15); and/or

controlling movement of the arm.

25. A computer program product or computer-readable storage medium comprising instructions which, when executed by a computer, cause the computer to carry out the method of any of claims 23 to 24.

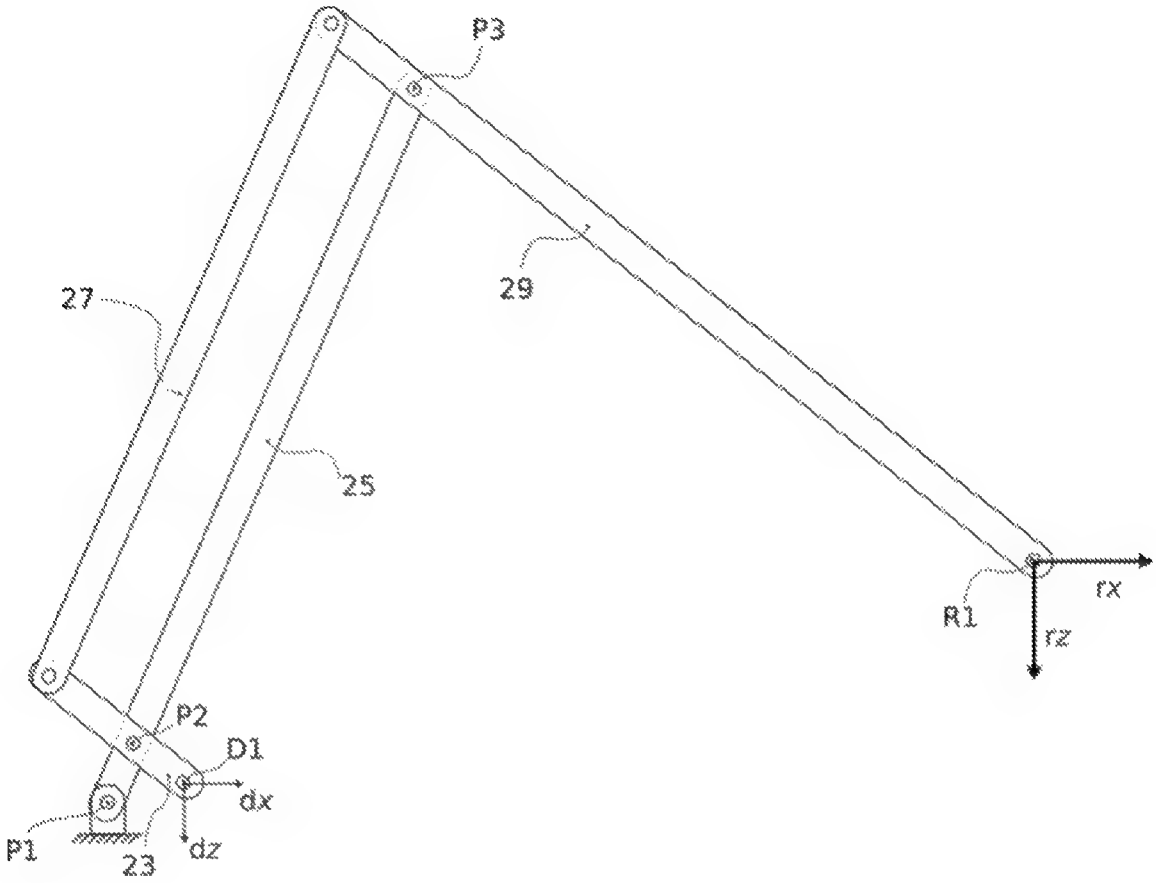

Figure 1

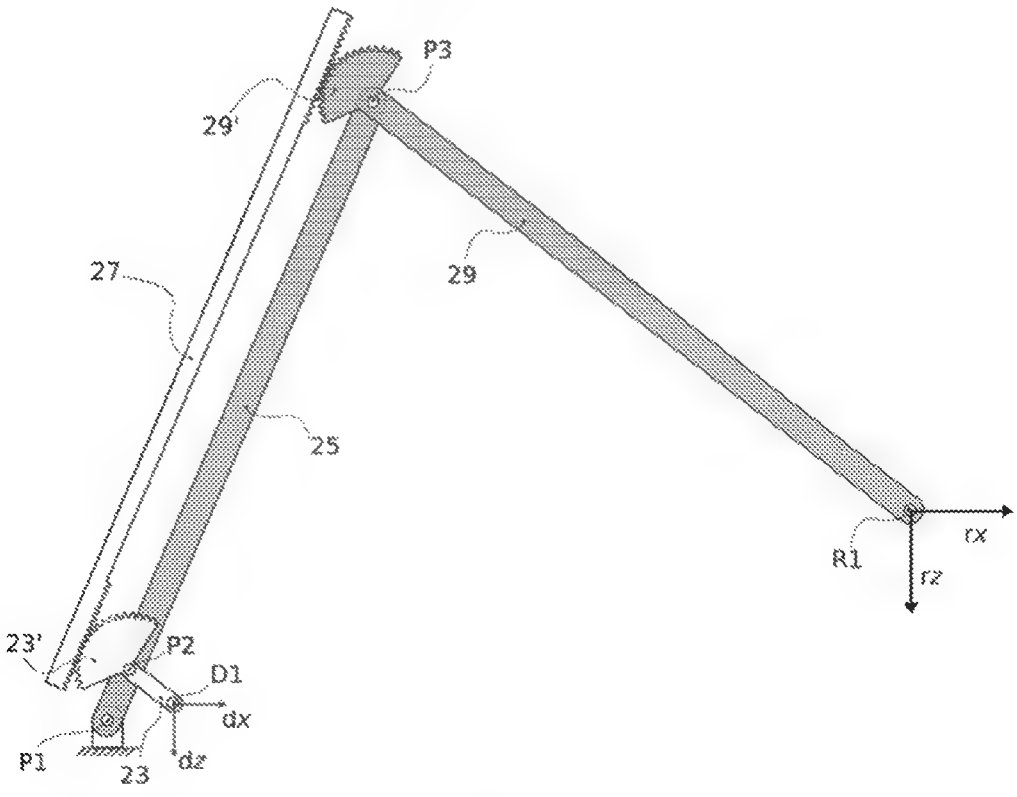

Figure 2

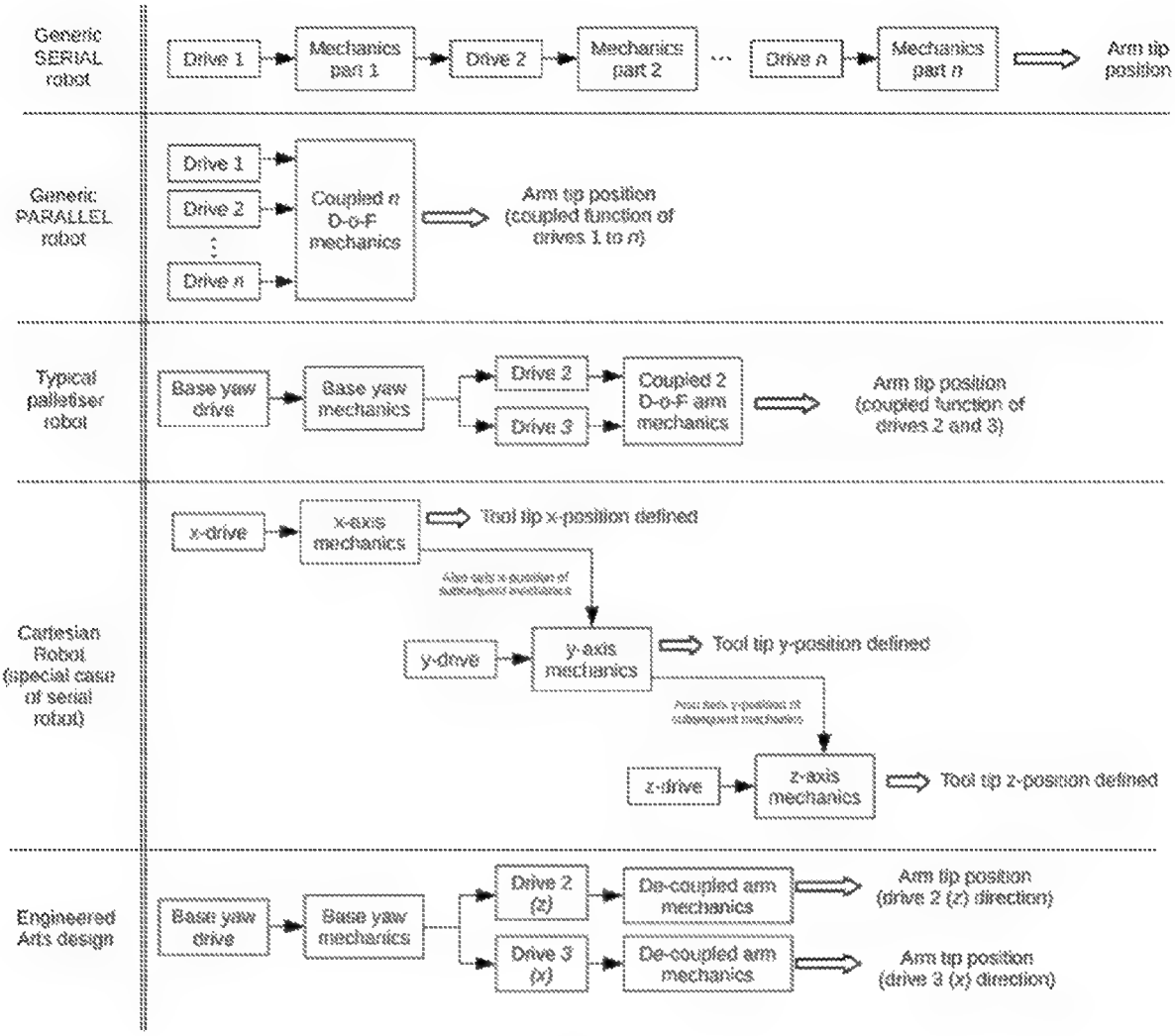
Generic SERIAL robot
Drive 1
Mechanics part 1
Drive 2
Mechanics part 2
Drive n
Mechanics part n
Arm tip position
Generic PARALLEL robot
Drive 1
Drive 2
Drive n
Coupled n D-o-F mechanics
Arm tip position (coupled function of drives 1 to n)
Typical palletiser robot
Base yaw drive
Base yaw mechanics
Drive 2
Drive 3
Coupled 2 D-o-F arm mechanics
Arm tip position (coupled function of drives 2 and 3)
Cartesian Robot (special case of serial robot)
x-drive
x-axis mechanics
Tool tip x-position defined
y-drive
y-axis mechanics
Tool tip y-position defined
z-drive
z-axis mechanics
Tool tip z-position defined
Engineered Arts design
Base yaw drive
Base yaw mechanics
Drive 2 (z)
Drive 3 (x)
De-coupled arm mechanics
De-coupled arm mechanics
Arm tip position (drive 2 (z) direction)
Arm tip position (drive 3 (x) direction)

Figure 3

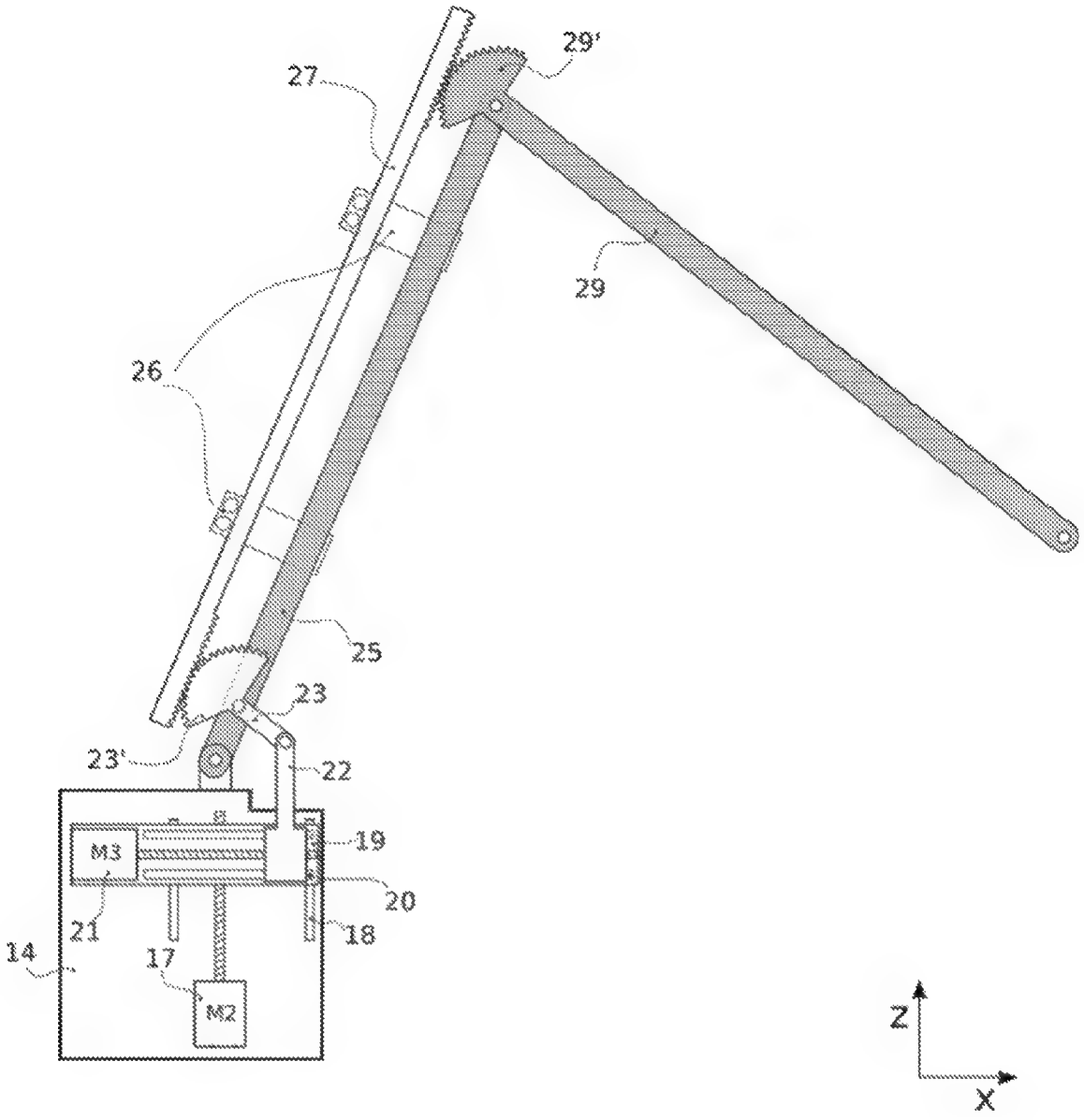

Figure 4a

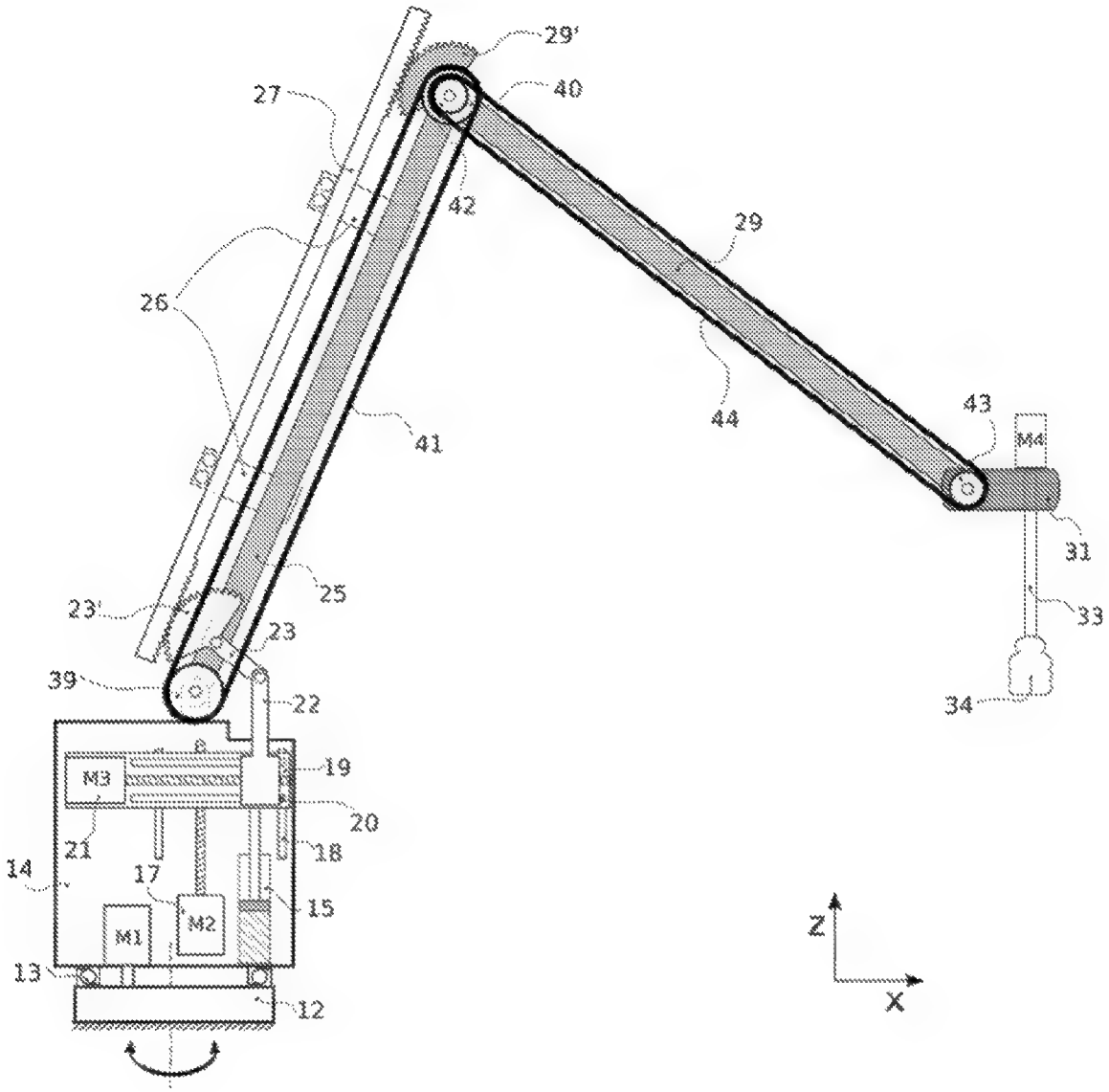
29'
27
40
42
29
26
44
43
M4
41
31
25
33
23'
23
39
22
34
19
M3
20
21
18
14
17
15
M2
M1
13
12
Z
X

Figure 4b

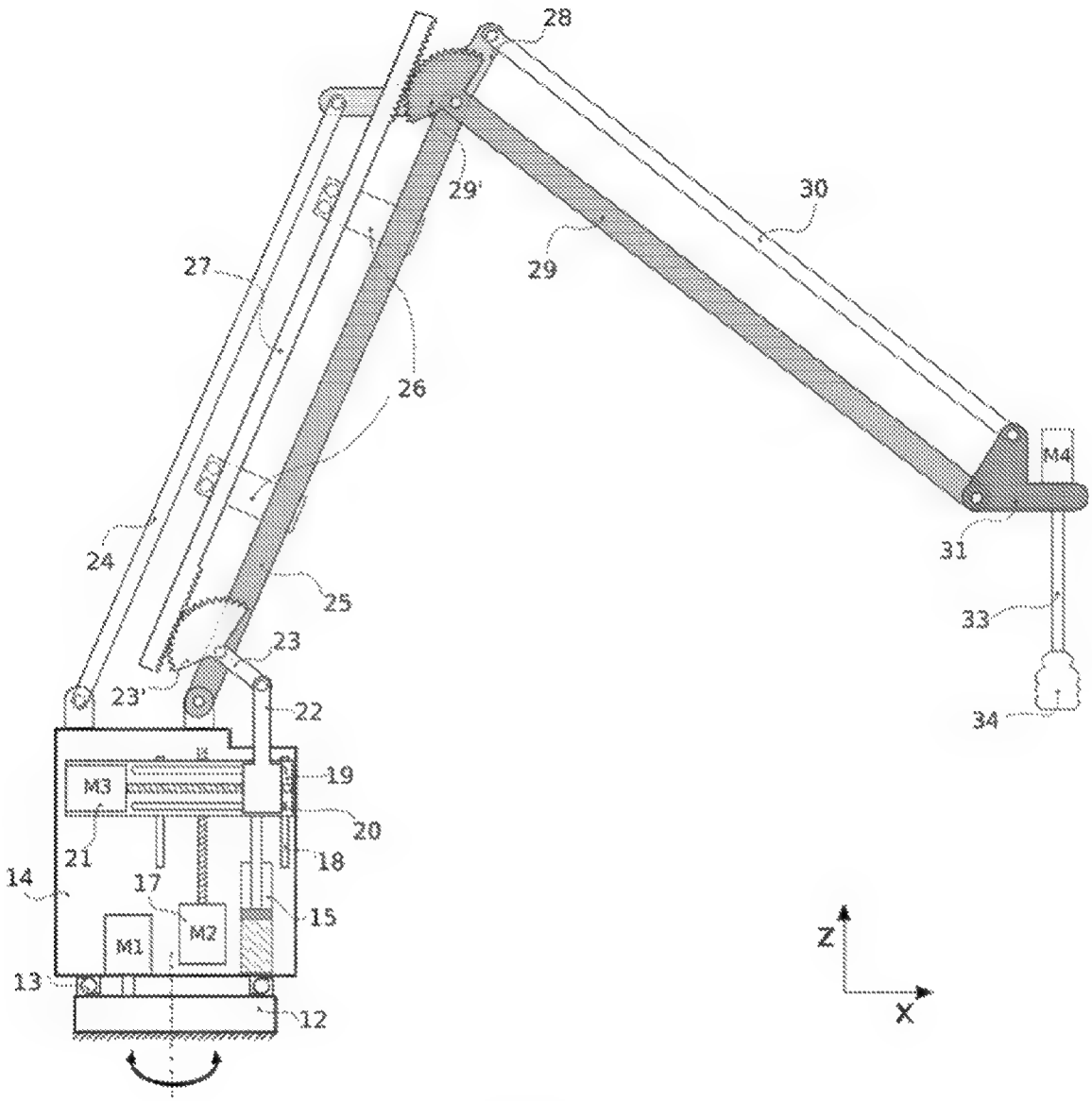
28
29'
30
29
27
26
M4
31
24
25
33
23
23'
22
34
M3
19
20
21
18
14
17
15
M1
M2
13
12
Z
X

Figure 4c

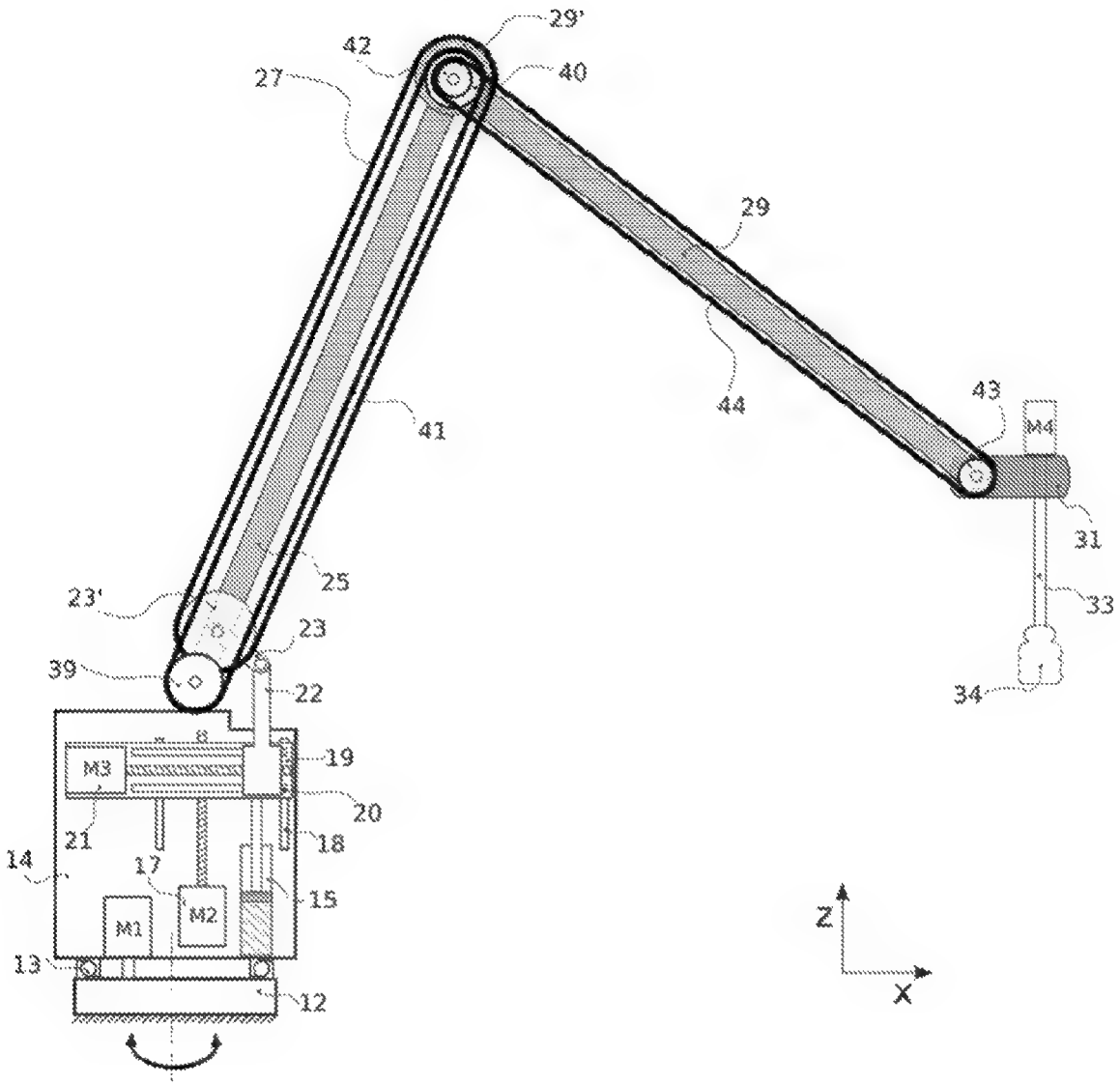
29'
42
40
27
29
44
43
M4
41
31
25
33
23'
23
39
22
34
19
M3
20
21
18
14
17
15
M1
M2
13
12
Z
X

Figure 5

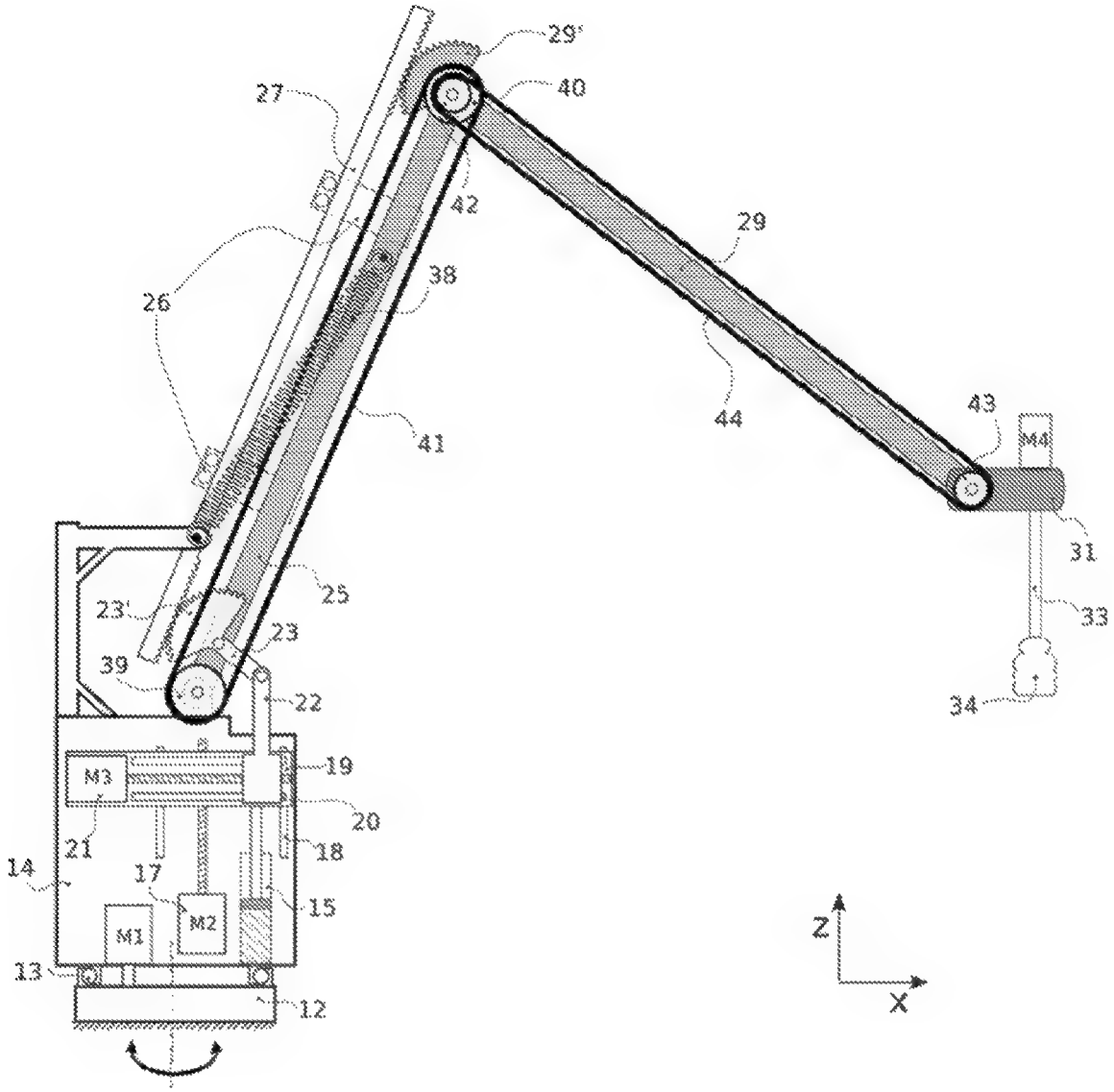
29'
27
40
42
29
38
26
44
43
M4
41
31
25
33
23'
23
39
22
34
19
M3
20
21
18
14
17
15
M1
M2
13
12
Z
X

Figure 6

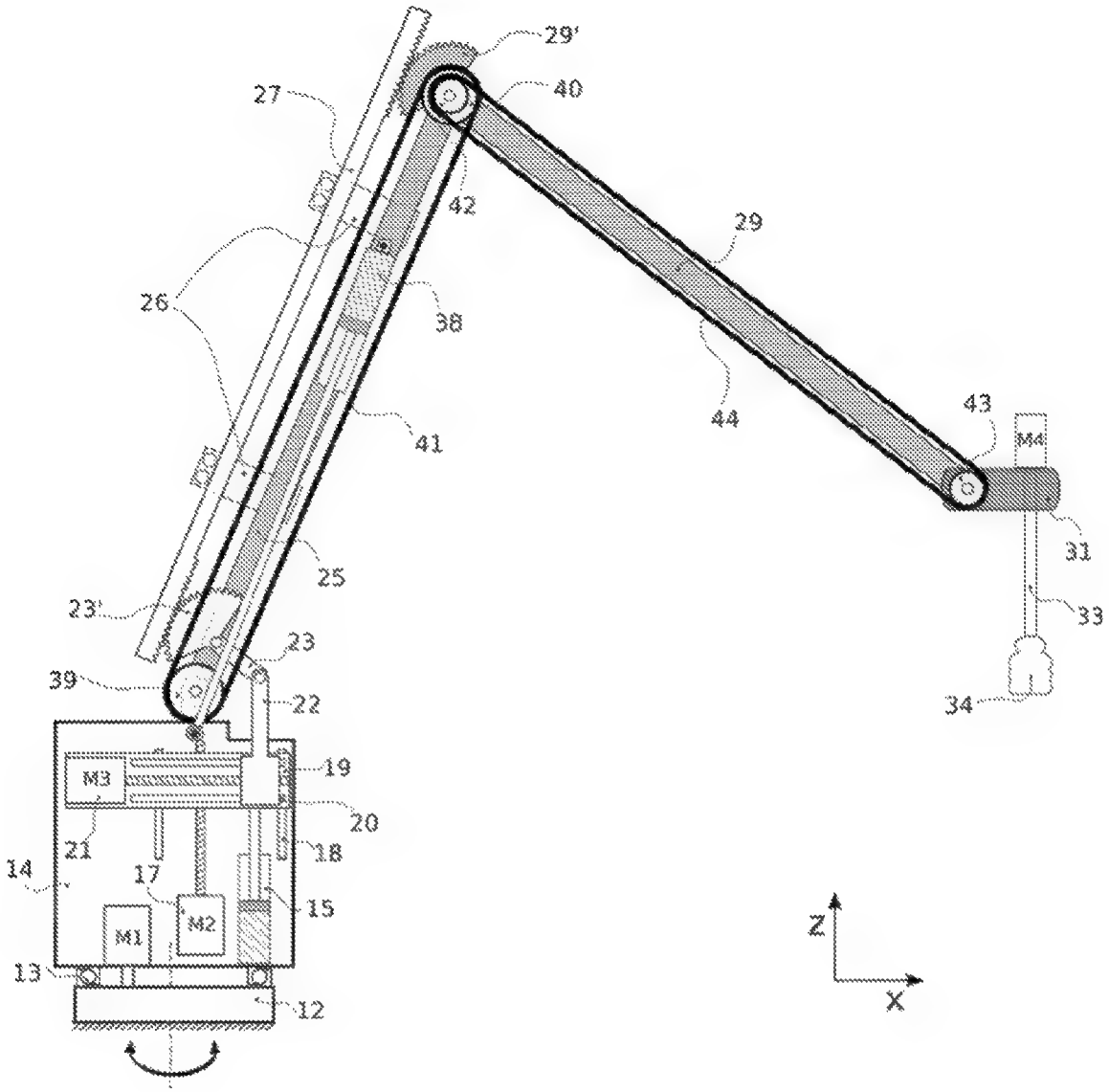
29'
27
40
42
29
26
38
44
43
M4
41
31
25
33
23'
23
39
22
34
19
M3
20
21
18
14
17
15
M2
M1
13
12
Z
X

Figure 7

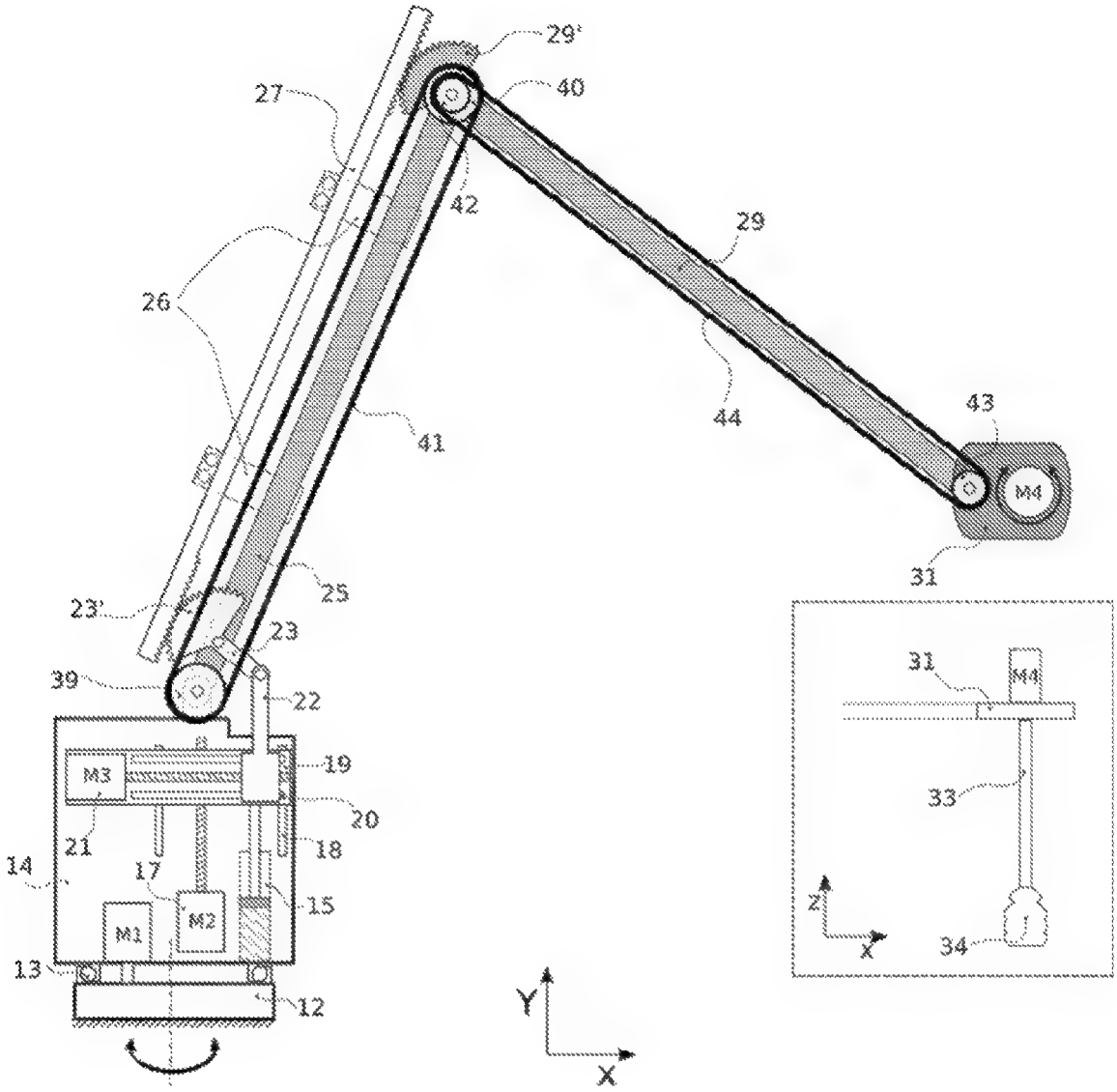
29'
27
40
42
29
26
44
43
41
M4
31
25
23'
23
39
22
M3
19
20
21
18
14
17
15
M1
M2
13
12
Y
X
31
M4
33
Z
X
34

Figure 8

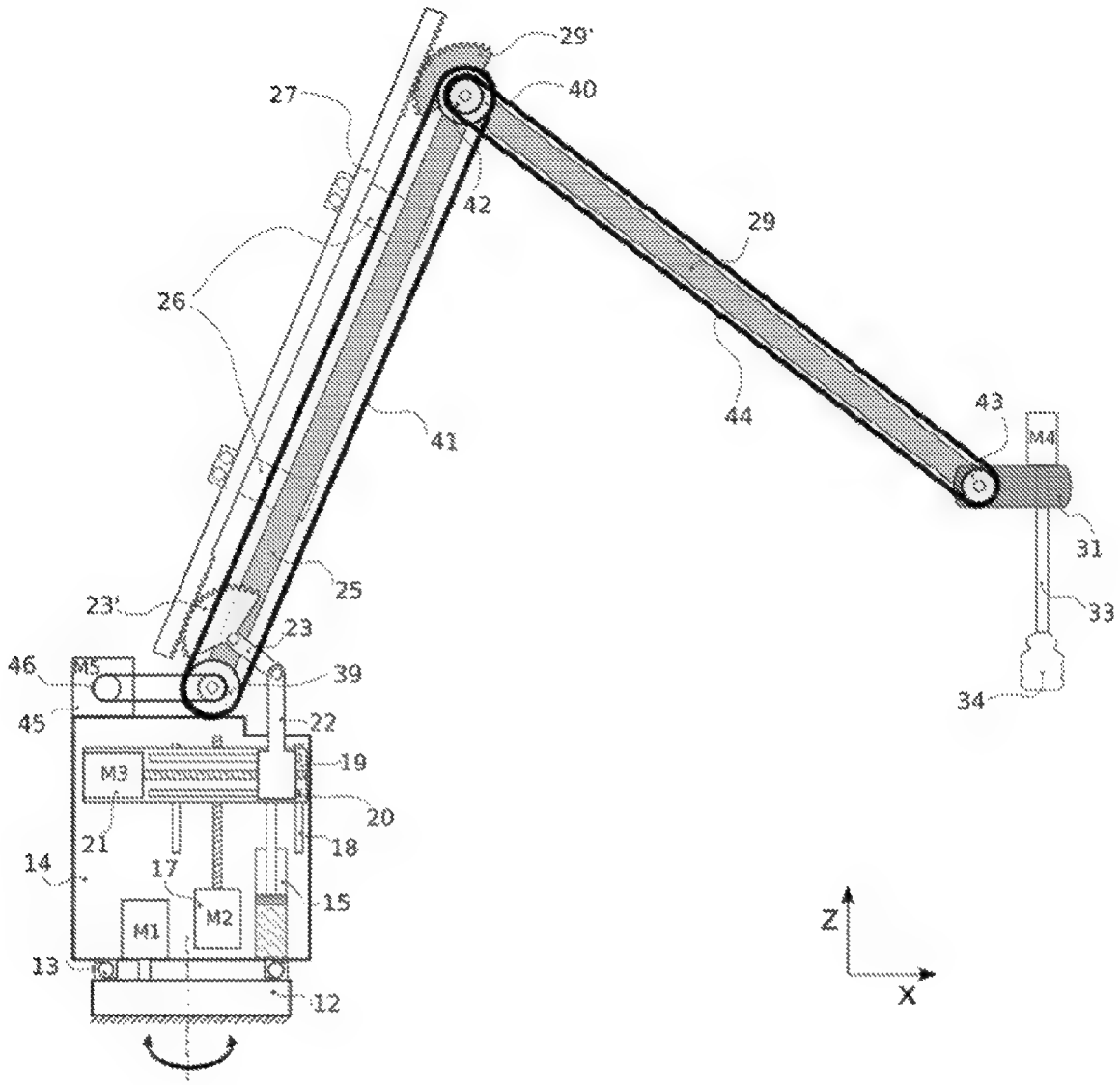
29'
27
40
42
29
26
44
43
M4
41
31
25
33
23'
23
46
M5
39
34
45
22
M3
19
20
21
18
14
17
15
M1
M2
13
12
Z
X

Figure 9

INTERNATIONAL SEARCH REPORT

International application No
PCT/GB2022/051025

A. CLASSIFICATION OF SUBJECT MATTER
INV. B25J9/10 B25J19/00
ADD.

According to International Patent Classification (IPC) or to both national classification and IPC

B. FIELDS SEARCHED

Minimum documentation searched (classification system followed by classification symbols)
B25J

Documentation searched other than minimum documentation to the extent that such documents are included in the fields searched

Electronic data base consulted during the international search (name of data base and, where practicable, search terms used)
EPO-Internal

C. DOCUMENTS CONSIDERED TO BE RELEVANT

Category*	Citation of document, with indication, where appropriate, of the relevant passages	Relevant to claim No.
X	GB 2 095 644 A (ATOMIC ENERGY AUTHORITY UK) 6 October 1982 (1982-10-06)	1,2,4,5, 7,15,22, 23,25
A	figures 1-3 page 1, column 1, line 49 - column 2, line 119	3,6,8

X	SU 623 732 A1 (TS N K B NI KHIM T I [SU]) 15 September 1978 (1978-09-15)	1-5,7, 15,22, 23,25
A	figure 1	6,8

X	FR 1 385 438 A (AUTOM SOC) 15 January 1965 (1965-01-15)	1,2,4,5, 7,15,22, 23,25
A	figures 1-3	3,6,8

☐ Further documents are listed in the continuation of Box C.

☒ See patent family annex.

* Special categories of cited documents :

"A" document defining the general state of the art which is not considered to be of particular relevance

"E" earlier application or patent but published on or after the international filing date

"L" document which may throw doubts on priority claim(s) or which is cited to establish the publication date of another citation or other special reason (as specified)

"O" document referring to an oral disclosure, use, exhibition or other means

"P" document published prior to the international filing date but later than the priority date claimed

"T" later document published after the international filing date or priority date and not in conflict with the application but cited to understand the principle or theory underlying the invention

"X" document of particular relevance;; the claimed invention cannot be considered novel or cannot be considered to involve an inventive step when the document is taken alone

"Y" document of particular relevance;; the claimed invention cannot be considered to involve an inventive step when the document is combined with one or more other such documents, such combination being obvious to a person skilled in the art

"&" document member of the same patent family

Date of the actual completion of the international search	Date of mailing of the international search report
7 July 2022	08/09/2022

Name and mailing address of the ISA/	Authorized officer
European Patent Office, P.B. 5818 Patentlaan 2 NL - 2280 HV Rijswijk Tel. (+31-70) 340-2040, Fax: (+31-70) 340-3016	Kielhöfer, Simon

1

INTERNATIONAL SEARCH REPORT

International application No.
PCT/GB2022/051025

Box No. II Observations where certain claims were found unsearchable (Continuation of item 2 of first sheet)

This international search report has not been established in respect of certain claims under Article 17(2)(a) for the following reasons:

1. ☐ Claims Nos.:
because they relate to subject matter not required to be searched by this Authority, namely:

2. ☐ Claims Nos.:
because they relate to parts of the international application that do not comply with the prescribed requirements to such an extent that no meaningful international search can be carried out, specifically:

3. ☐ Claims Nos.:
because they are dependent claims and are not drafted in accordance with the second and third sentences of Rule 6.4(a).

Box No. III Observations where unity of invention is lacking (Continuation of item 3 of first sheet)

This International Searching Authority found multiple inventions in this international application, as follows:

see additional sheet

1. ☐ As all required additional search fees were timely paid by the applicant, this international search report covers all searchable claims.

2. ☐ As all searchable claims could be searched without effort justifying an additional fees, this Authority did not invite payment of additional fees.

3. ☐ As only some of the required additional search fees were timely paid by the applicant, this international search report covers only those claims for which fees were paid, specifically claims Nos.:

4. ☒ No required additional search fees were timely paid by the applicant. Consequently, this international search report is restricted to the invention first mentioned in the claims;; it is covered by claims Nos.:

1-8, 15, 22, 23, 25

Remark on Protest

☐ The additional search fees were accompanied by the applicant's protest and, where applicable, the payment of a protest fee.

☐ The additional search fees were accompanied by the applicant's protest but the applicable protest fee was not paid within the time limit specified in the invitation.

☐ No protest accompanied the payment of additional search fees.

FURTHER INFORMATION CONTINUED FROM PCT/ISA/ 210

This International Searching Authority found multiple (groups of) inventions in this international application, as follows:

1. claims: 1-8, 15, 22, 23, 25

Robotic manipulator arm system

---

2. claims: 9-12

Robotic manipulator arm system comprising orientation-constraining members

---

3. claims: 13, 14, 16-21, 24

Robotic manipulator arm system comprising a force balance element

---

INTERNATIONAL SEARCH REPORT

Information on patent family members

International application No
PCT/GB2022/051025

Patent document cited in search report	Publication date	Patent family member(s)	Publication date
GB 2095644 A	06-10-1982	NONE	
SU 623732 A1	15-09-1978	NONE	
FR 1385438 A	15-01-1965	NONE	